STATE OF CALIFORNIA

STANDARD AGREEMENT

STD 213 (Rev 06/03)

SAMPLE AGREEMENT

AGREEMENT NUMBER

8CA02036

REGISTRATION NUMBER

1. This Agreement is entered into between the State Agency and the Contractor named below:

STATE AGENCY'S NAME

Department of Forestry and Fire Protection

CONTRACTOR'S NAME

2. The term of this Agreement is: Upon Approval through April 15, 2015

3. The maximum amount of this Agreement is: $

4. The parties agree to comply with the terms and conditions of the following exhibits which are by this reference made a part of the Agreement:

Exhibit A – Scope of Work	19	pages
Attachment 1 – Additional Specifications	8	pages
Attachment 2 – Maps & Site Plans	1	page
Attachment 3 – Reporting Operating Costs & Daily Water Use Forms	2	pages
Exhibit B – Budget Detail and Payment Provisions	2	page
Exhibit C* – General Terms and Conditions	GTC	610
Exhibit D – Special Terms and Conditions	2	pages
Exhibit E – Additional Provisions	4	pages
Attachment 1 – SB/DVBE Subcontractor Payment Certification	1	page
Exhibit F – Digest of Laws Related to Association with Prison Inmates	1	page
Exhibit G – Camp Access	3	pages

Items shown with an Asterisk (*), are hereby incorporated by reference and made part of this agreement as if attached hereto. These documents can be viewed at www.ols.dgs.ca.gov/Standard+Language

IN WITNESS WHEREOF, this Agreement has been executed by the parties hereto.

CONTRACTOR

CONTRACTOR'S NAME *(if other than an individual, state whether a corporation, partnership, etc.)*

BY *(Authorized Signature)* | DATE SIGNED *(Do not type)*

PRINTED NAME AND TITLE OF PERSON SIGNING

ADDRESS

STATE OF CALIFORNIA

AGENCY NAME

Department of Forestry and Fire Protection

BY *(Authorized Signature)* | DATE SIGNED *(Do not type)*

PRINTED NAME AND TITLE OF PERSON SIGNING

ADDRESS

California Department of General Services Use Only

☐ Exempt per: _____

EXHIBIT A
(Scope of Work)

SCOPE OF WORK

1. The State of California, Department of Forestry and Fire Protection (CAL FIRE) hereinafter called the STATE agrees to sell to [purchaser name] of [address], hereinafter called the PURCHASER and the PURCHASER agrees to purchase from the STATE, all the live timber designated for cutting by the STATE, and merchantable as hereinafter defined at the rate and in strict conformity with the requirements and conditions hereinafter set forth for sawlogs and other merchantable material; the PURCHASER further agrees to do other work as herein specified.

PURCHASER shall provide all materials, labor, equipment, tools, permits, taxes and fees described herein and in strict conformity with the requirements and conditions hereinafter set forth for sawlogs and other merchantable material.

A. Timber Sale Location.

All live timber designated for cutting by CAL FIRE and merchantable as hereinafter defined, on an area of about 288 acres, designated on the ground by the STATE's assigned Timber Sale Officer prior to cutting in parts of Sections 26, 27, 34, 35 and 36, Township 18 North, Range 17 West, MDB&M, in the Jackson Demonstration State Forest approximately 5 miles southeast of Fort Bragg, California, and as designated on the attached map (Exhibit A, Attachment 2) which hereby is made part of this Agreement.

B. Sale Harvest Boundary.

The boundaries of the sale area have been marked as depicted on the attached map (Exhibit A, Attachment 2) and have been examined by the PURCHASER. All trees marked for cutting, whether merchantable or not, shall be felled by the PURCHASER, unless specifically reviewed and waived by the Timber Sale Officer. No dead standing conifer trees or unmarked hardwood trees shall be felled except as provided for elsewhere in this Agreement. The PURCHASER agrees to log the merchantable conifer timber designated for cutting as described in this Agreement. The STATE does not guarantee the amount of timber designated in the estimate.

2. GOOD FAITH PERFORMANCE.

A. By having submitted his or her bid and entering into this Agreement, the PURCHASER hereby declares the intention to timely harvest and removal of the timber designated for cutting within the harvest area described herein. If it appears to the Timber Sale Officer that the PURCHASER does not have a good faith intention to perform the scheduled harvesting, the PURCHASER shall be provided a hearing with a STATE manager who is not directly involved in operations at Jackson Demonstration State Forest in order to provide the PURCHASER with an opportunity to explain why the STATE ought not to terminate the Agreement. The STATE manager who administers the hearing shall consider all documentation and testimony provided by the STATE and the PURCHASER, and such materials shall constitute an administrative record upon which his or her decision shall be entirely based. If the STATE manager determines that the PURCHASER's intent is to not perform the specified harvesting in a timely manner: 1) the Agreement between the STATE and the PURCHASER shall be immediately terminated based on the PURCHASER's failure to perform substantial and material term(s) of the Agreement, constituting a breach of contract; 2) the PURCHASER shall be liable to the STATE for reasonable damages associated with breach; and 3) the contract may be awarded to the next highest bidder.

B. This contract includes work to be done as mitigation for the effects of timber operations. This work can include activities in direct mitigation, off site mitigation, or compensation for the impacts of timber operations. It includes road work such as installing water breaks and rolling dips and removal of stream crossings; all work done to ensure that timber operations do not result in significant effect on the environment.

C. The merchantable species, estimated net merchantable amount by the Revised Scribner Log Rule as prepared by the Northwest Log Rules Advisory Group, July 1, 1972, the rate of payment per thousand board feet, and the estimated total value are as follows:

EXHIBIT A
(Scope of Work)

Merchantable Species Value	Estimated Net Amount (Mbf)	Rate per Mbf	Estimated Total
Redwood	1,538	[/mbf]	$ [total value]
Douglas - fir	206	$ 40/mbf	$ 8,240
Grand fir, Western Hemlock, miscellaneous other conifers	52	$ 20/mbf	$ 1,040
TOTALS	1,796		$ [combined total value]

D. All timber removed by reason of this sale shall be 100 percent scaled by a recognized, independent, third party scaling organization at the PURCHASER's expense. Additional provisions governing scaling appear elsewhere in this Agreement.

3. SCHEDULING

A. PRODUCTION RATE/PAYMENT SCHEDULE

Unless written extension of time is granted by the Director of Forestry and Fire Protection, all merchantable timber designated for cutting shall be paid for and cut on or before June 30, 2014. This date may be extended or the required volume may be adjusted mutually by the STATE and the PURCHASER due to unforeseen circumstances. All merchantable timber designated for cutting must be removed, and all other timber operations must be completed by November 15, 2014. This Agreement shall terminate on April 15, 2015, by which date all requirements of the Agreement must be completed.

The STATE may grant an extension of operating time to complete operations on terms and conditions as may be specified by the STATE. No extension of the specified payment schedule shall be granted unless the PURCHASER pays, in advance, an interest payment on the outstanding timber value owed the STATE under the contract. Interest shall be payable at 0.33 percent per annum, prorated for the term of the extension. The "outstanding timber value" shall be the original contract timber value established by cruise estimate, or specified portion thereof, less the sum of payments received by the STATE as of the applicable designated payment date. Upon completion of harvesting operations, the STATE shall recalculate the interest due based upon the actual value of timber removed and the actual monthly unpaid balance during the term of the extension and adjust the final payment accordingly. Operating time extensions granted under this provision shall not alter any scheduled progress payments required above. Operating time extensions shall not be granted if said scheduled progress payments have not been received by the STATE, or if any other contractual requirements have not been met by the PURCHASER.

Once timber harvesting operations have commenced, the PURCHASER agrees to continue operations at a normal production level until all contractual provisions are completed unless shutdowns are required by wet soil conditions, hazardous fire conditions, or are otherwise approved by the Timber Sale Officer.

B. PRIOR APPROVAL FOR CONDUCTING BUSINESS ON WEEKENDS/HOLIDAYS

The PURCHASER shall notify and obtain approval from the STATE in advance on each occasion of conducting timber operations in the sale area on weekends or State holidays. There shall be no log hauling on weekends or holidays between Memorial Day weekend and Labor Day.

EXHIBIT A
(Scope of Work)

4. The Project Representatives during the term of this agreement will be:

State Agency: Dept. Forestry and Fire Protection	Contractor:/Purchaser
Name: , Timber Sale Officer	Name:
Phone:	Phone:
Fax:	Fax:
Email:	Email:

Direct all inquiries to:

State Agency: Dept. Forestry and Fire Protection	Contractor/Purchaser:
Section/Unit: Business Services – Acquisition Unit	Section/Unit:
Attention: Jeff Kincaid II, Contract Analyst	Attention:
Address: P.O. Box 944246 Sacramento, CA 95815	Address:
Phone: (916) 445-9942	Phone:
Fax: (916) 323-1888	Fax:
Email: Jeff.Kincaid@fire.ca.gov	Email:

5. <u>PURCHASER'S REPRESENTATIVE AVAILABILITY.</u>

At all times, when construction or logging operations are in progress, the PURCHASER shall have a representative readily available to the area of such operations, who shall be authorized to receive, on behalf of the PURCHASER, any notices and instructions given by the STATE in regard to performance under this Agreement, and to take such action thereon as is required by the terms of this Agreement.

6. <u>CONTRACT AMENDMENT</u>.

A. Extensions.

PURCHASER is obligated to satisfactorily complete the work on or before the contract's expiration date. If the work called for under the contract is not completed within the time specified, CAL FIRE shall have the right to extend this agreement for 1 year by amendment at the same terms, conditions and cost or not extend the time limit for its completion as may best serve the interest of the State.

B. Services Quantity.

The Agreement may be amended to increase or decrease services at the rate(s) specified in Exhibit B.

C. Changes.

1) If any conflict arises between provisions of the plans, specifications, scope of work, and any such law, then the PURCHASER shall notify the STATE at once.

EXHIBIT A
(Scope of Work)

2) Whenever the necessity for a change arises either at the request of the Contractor or at the request of the State, the either party shall prepare a full and completely detailed estimate of cost and time for the change at the direction of the State.

3) Changes in the work made necessary due to unexpected or unforeseen site conditions, discovery of errors in plans, specifications, or scope of work requiring immediate clarification in order to avoid a serious work stoppage, or changes of a kind where the extent cannot be determined until completed are types of emergency changes which may be authorized by the STATE.

7. PRODUCTION COST DATA.

The PURCHASER understands that the primary objective of the STATE in entering into this Agreement to log the sale area, which is a part of the Jackson Demonstration State Forest, an experimental forest of the State of California, is to provide a research and demonstration area and to determine the facts and data concerning the timber sale area and the treatment thereof through the actions of the PURCHASER under this Agreement.

The PURCHASER agrees to keep records and furnish the STATE production and cost data with respect to activities conducted pursuant to this Agreement. Required data shall include person-hours and equipment-hours spent on each activity, and applicable rates for employees, machines and supervision, and costs for any materials or services needed for completion of activities required by this Agreement. The information shall be reported on a form provided by the STATE (Exhibit A, Attachment 3), or in an alternative format proposed by the PURCHASER and acceptable to the STATE. The requirement for providing production and cost data shall apply equally to any contractors or subcontractors hired by the PURCHASER to complete the project specified above. This information will be furnished to the STATE before the performance bond or other security is released.

The PURCHASER understands that the protection of research and experimental values, the maintenance of low fire hazards, the prevention of injury to trees not designated for cutting, the creation of conditions favorable to the regeneration of the State Forest, and other provisions of this Agreement are for fulfillment of the research and demonstration purpose, and the provisions of this Agreement will be strictly enforced to that end.

The PURCHASER agrees to keep records and furnish the STATE daily water use data with respect to water drafting activities. Required data shall include landowner, operator name, year and month of water drafting and drafting site location, filing time, pump rate and total gallons used. The information shall be reported on a form provided by the STATE (Exhibit A, Attachment 3). Daily water use information will be furnished to the STATE no later than the first Tuesday following the month water use information was collected.

8. DOMESTIC PROCESSING OF TIMBER

The PURCHASER agrees that pursuant to Section 4650.1, Public Resources Code, timber from State Forests shall not be sold to any primary manufacturer, nor to any person for resale to a primary manufacturer, who makes use of such timber at any plant not located within the United States unless it is sawn on four sides to dimensions not greater than 4 inches by 12 inches. The PURCHASER has not sold unprocessed timber harvested from private timberlands and exported it into foreign commerce from California within one year prior to the bid date and agrees to refrain from that activity for one year after contract termination.

The PURCHASER agrees that pursuant to Sections 1515-1521, Title 14, California Code of Regulations, timber in this sale shall not be substituted for timber exported by the PURCHASER obtained from other sources. The PURCHASER further agrees pursuant to Section 1517, Title 14, California Code of Regulations, to give written notice to the STATE of any or all locations where said timber will be processed until such time as the timber has been sawn to dimensions of 4 inches by 12 inches or less. The required written notice shall be provided to the STATE at least one week before commencement of delivery of logs to each processing location.

EXHIBIT A
(Scope of Work)

If the PURCHASER sells, exchanges, or otherwise disposes of said timber before it has received domestic processing, the PURCHASER agrees to require each buyer, exchangee, or recipient to execute a written agreement which shall:

A. Specify domestic processing for the timber involved pursuant to Section 4650.1, Public Resources Code.

B. Require the execution of said agreement between the parties to any subsequent transactions involving said timber.

The failure of any party to a transaction involving said timber to execute the required agreement shall constitute noncompliance on the part of the PURCHASER with the terms of this provision.

The PURCHASER shall file with the STATE a copy of each such agreement and shall retain for three years from the date of each transaction the records of all sales, exchanges, or dispositions of such designated timber. Upon request, such records shall be made available to STATE.

Any purchaser of timber from State Forests who makes or permits use of said timber in violation of Section 4650.1, Public Resources Code, or Sections 1515-1521, Title 14, California Code of Regulations, shall be prohibited from purchasing State Forest timber for a period of five years and may have his timber operator license suspended for up to six months.

9. <u>LOG BRANDING.</u>

The PURCHASER as required by the Timber Sale Officer shall identify all timber by making a mark with a brand provided by the STATE in a conspicuous place on the end of each log or piece of timber prior to removal from the sale area. Prior approval must be obtained in writing from the Sale Officer regarding any changes in the brand or branding procedure.

10. <u>GENERAL UTILIZATION STANDARDS.</u> (*See Item 12 for Utilization Standards and Practices.)*

The minimum log dimensions for utilization purposes will be 8 feet in length and 6 inches in small-end diameter. However, any material unmerchantable because of size as herein defined, removed at the option of the PURCHASER, shall be scaled and paid for at the same rate as merchantable material.

Any log segment presented for scaling shall be scaled as merchantable which has a net merchantable volume of at least 10 board feet, provided that the log segment has a net merchantable scale of at least 25 percent of the total volume, and provided that firm stain shall not be regarded as defect and no deduction shall be made for same in scaling.

11. <u>SCALING SPECIFICATIONS.</u>

The forest products made and all timber removed by reason of this sale shall be scaled by a recognized independent "third party" scaling organization agreeable to the STATE. Logs will be scaled as presented and results of said scales shall be conclusive and binding upon the PURCHASER and the STATE unless otherwise contested through check scale procedures. Procedures required by the STATE for implementation of "third party" scale shall be as follows:

A. Logs shall be scaled using the Revised Scribner Decimal C Log Rule, making allowances for visible defect in accordance with the scaling practices contained in the latest National Forest Log Scaling Handbook (Chapters 20 and 30).

B. Payment for scaling and reporting services performed by the scaling organization shall be made by the PURCHASER of State Forest timber, and the STATE assumes no responsibility in this regard.

   If the scaling organization is the Northern California Log Scaling and Grading Bureau of Arcata, California, the PURCHASER shall make supplemental payments as described below to the Bureau on behalf of the STATE for subscription to and use of the Bureau's remote access electronic data reporting service, termed the Logman System and twelve month's rental charges for State Check Scaler's handheld computer. This shall be in addition to payment for printed reports and other services required elsewhere in this section.

EXHIBIT A
(Scope of Work)

1) The PURCHASER shall make a single payment of $3,700.00, regardless of the level of harvest activity on this sale; this payment shall be made to the Northern California Log Scaling and Grading Bureau of Arcata within 7 days of contract approval.

2) The PURCHASER shall provide all electronic scale data obtained from any other scaling bureau to the Northwest Scaling Bureau.

If more than one scaling bureau is used, data shall be transmitted to a single scaling bureau designated by the STATE for a single point-source for all reports. All expenses associated with this shall be paid by the Purchaser.

The use of a STATE approved third party log and load reporting service (LLRS) is required. PURCHASER shall ensure that log volume measurement data is received by the LLRS within one business day of logs being measured. All expenses associated with this service shall be paid by the PURCHASER.

Prior to scaling STATE logs, the STATE will provide the scaling organization with a scaler information sheet. The PURCHASER shall insure that all third party scalers who scale STATE logs delivered from this sale are knowledgeable about contract specifications governing scaling requirements under this Agreement.

C. All loads must be scaled at the first unloading point and within three working days from the date of removal from the State Forest.

D. The scaling organization or the PURCHASER shall notify the State Forest Manager or the Manager's representative of all scaler rotations of one month or more so that the STATE may obtain adequate check scales.

E. Organization scalers shall be required to make a copy of the scale tickets available to the STATE on those loads being check scaled by the STATE.

F. Organization scalers shall perform the following services:

1) Record log species, diameter, length, and amount of defect on the scale tickets and forward such information to the scaling organization on the day of scaling.

2) Scale all logs in a load at the same location and time.

3) Identify with paint those loads that have been scaled and immediately notify the STATE when it is known by the scaler that a load has bypassed or been picked up from the designated scaling location before being scaled. In the event of a missed (non-scaled) load, the PURCHASER shall within five working days account for the load by the following process:

a) Average the gross volumes and net volumes of four loads hauled immediately prior to and four loads hauled immediately after the missed load. The ticket numbers of the loads used for calculating the averages shall be provided to the STATE for audit purposes.

b) Find a representative existing scaled load that has a gross volume within one percent of the calculated average gross load volume and a net volume within three percent of the calculated average net load volume. The gross and net volumes of the selected load must be equal to or more than the calculated averages. If no representative load can be found then a log load scale ticket must be created which meets these specifications. The STATE retains the right of approval on load selection.

c) Using the trip ticket number of the missed load, insert the scale ticket data of the representative or created load into the scale reporting system. The load shall be included in the 15 day summary covering the time period when the data was inserted into the system. The STATE shall be notified when this occurs.

EXHIBIT A
(Scope of Work)

G. The PURCHASER shall notify the STATE of any change on a scale ticket that affects the volume of the original scale after the copy has been mailed to the STATE.

H. The scaling organization shall process scale tickets of all STATE loads daily and mail (email may be acceptable), at its expense, copies of daily scale certifications and log listings to the State Forest Headquarters. Semi-monthly scaled volume summaries as of the 15th and the last day of the month are required to be mailed to the State Forest Headquarters. Semi-monthly summaries shall provide gross and net volume totals by species. When adjustments are required to compensate for omissions or errors in daily scaled volume summaries, the STATE may request the scaling organization to issue an adjusted summary report for those specified time periods. The PURCHASER shall also be notified by the STATE when such an adjustment has been made.

I. At least three loads scaled within the previous five operating days shall be left rolled out in the mill yard where scaled to facilitate check scaling, unless otherwise approved by the Sale Officer.

J. The scaling organization shall conduct a minimum of one check scale per month per scaler during the operating season to document scaler proficiency. Standards for proficiency shall be taken from Section 64 of the National Forest Log Scaling Handbook. Copies of such check scales shall be furnished to the STATE within 10 days of completion of said check scales. The STATE reserves the right to check scale organizational scalers at intervals determined by the STATE.

K. If, through STATE check scales, it is found that a scaler's work is unacceptable, the STATE will notify the scaling organization and the PURCHASER and request a check scale to be submitted to the STATE within 10 working days. Should remedial action fail to achieve correction, the STATE may immediately terminate the acceptance of the scaler's work until the scaler's competence is mutually certified by all concerned parties. PURCHASER scaling complaints shall be jointly and promptly investigated by the STATE and the scaling organization. The STATE may terminate third party scaling and assume scaling responsibilities at any time if the scaling organization's scale or records are unacceptable to the STATE. The PURCHASER shall pay the STATE a surcharge on stumpage payments of $5.00 per thousand board feet net scale for all timber scaled by the STATE or by a hired agent of the STATE following termination of third party scaling pursuant to this paragraph.

L. The maximum scaling length shall be 20 feet. Greater lengths shall be scaled as two or more logs, making allowance for taper. When the scaling lengths into which a log is divided for scaling are unequal, the longer length or lengths shall be considered as lying in, or toward the larger end of the log. Scaling lengths of multiple length logs shall be computed in accordance with the scaling practices contained in the latest National Forest Log Scaling Handbook.

M. Allowance for trim shall not exceed 6 inches for each 20 feet of length or fraction thereof. Logs overrunning the specified trim allowance shall be scaled to the next higher foot in length.

N. Logs shall be scaled at the small end and the average diameter inside bark taken to the nearest inch. Logs 21 feet and longer shall be measured at both ends and the average diameter inside bark taken to the nearest inch. Taper in logs 21 feet and over will be distributed according to the latest National Forest Log Scaling Handbook (Chapter 10). Taper in butt logs 21 feet and over shall be distributed according to USFS Supplement 4 dated March 1987, for all species as follows:

DIAMETER TAPER FOR BUTT LOGS 21 FEET AND OVER - ALL SPECIES

Log Length	Taper
21 to 27 feet:	2”
28 to 40 feet:	4”
41 to 51 feet:	6”
52 feet and over:	butt measurement required

EXHIBIT A
(Scope of Work)

O. The STATE shall provide the PURCHASER with a sufficient supply of five-part load receipts to identify each load of forest products removed. The fifth copy (card stock) shall be affixed to the load and shall stay with the load until decked. The white original shall be retained in the load receipt booklet and returned to the Timber Sale Officer by the operator as called for.

The PURCHASER may, on approval, provide equivalent load receipts to be used in place of the STATE's form. If the PURCHASER's forms are used, the PURCHASER shall provide to the STATE a sufficient quantity of forms for the estimated volume to be removed, prior to commencement of operations, forms to then be distributed to the operator by the Sale Officer. The STATE's copies of the load receipts shall remain in the load receipt booklet until collected by the Sale Officer.

To provide additional identification of loads of forest products removed, the PURCHASER shall paint the last three digits of the load receipt number on the rear end of each of the two outside bunk logs of each load. The PURCHASER shall provide for this purpose a sufficient quantity of high-visibility aerosol paint of a quality and color acceptable to the STATE.

P. To facilitate monitoring of periodic sale volume harvested, the PURCHASER shall provide a weekly report of faller days and volume felled. Weekly falling information is to be available for collection by the Timber Sale Officer or delivered to the State Forest headquarters no later than the following Tuesday.

12. <u>UTILIZATION STANDARDS AND PRACTICES.</u>

The PURCHASER agrees to the following utilization standards and practices:

A. Only that merchantable downed timber that is designated by the Timber Sale Officer shall be removed, and it shall be scaled the same as timber felled under this Agreement. Other downed timber, whether merchantable or not, shall be left in place, except where it occurs within the clearing limits for construction of truck roads and landings. Snags, whether merchantable or not, shall be left standing unless they must be felled for road or landing construction, for cable corridors, for safety reasons, or for fire protection purposes as designated in the Timber Harvesting Plan or by the Sale Officer.

B. Stumps shall be cut as low as possible and in no case shall be over 12 inches on the uphill side except where more height is needed to save timber or insure safe working conditions. Stumps which are not cut in accordance herewith and which should have been so cut in the judgment of the Timber Sale Officer shall, at the STATE's option, be either recut to 12 inches or less, if redwood, or paid for at the rate of $15.00 each. Such payments shall be regarded as liquidated damages in view of the difficulty of determining the actual damage to the STATE through wastage of the quantity and quality of the material involved.

C. All merchantable conifer trees felled by the PURCHASER shall be utilized to the fullest extent practicable, and at least to a top diameter inside bark of six inches. Maximum log length, including trim, shall be 41 feet unless longer lengths are approved in writing by the STATE.

D. The PURCHASER shall make every effort to conduct the felling operations to prevent careless or unnecessary breakage of timber. All trees designated for cutting shall be felled within the timber harvesting plan boundaries to the fullest extent practicable, considering locations of watercourses, felling damage, yarding method, and damage to leave trees. No trees shall be felled across the State Forest property line. When topography, lean of tree, regeneration and residual timber, location of roads, landings, watercourses, utility lines and buildings permit, all trees shall be felled in line with skidding direction. Gulch bottoms and other areas of heavy stands of timber as designated by the Timber Sale Officer shall be felled and logged in two or more stages in order to minimize blocked layouts and breakage.

Cable tree-pulling methods shall be used where needed to prevent unnecessary breakage to all trees having volumes in excess of 1,500 board feet, to prevent felling of trees into or across watercourses, or to control felling direction near

utility lines, public roads and property lines. Where poor volume recovery is expected because of anticipated breakage, the Sale Officer may specify that individual trees otherwise designated for cutting shall be left standing.

All fallers shall be equipped with falling wedges at all times. Fallers working in the Watercourse and Lake Protection Zones shall have ready access to and be knowledgeable in the use of tree-falling jacks and shall use them as necessary to direct the fall of trees away from watercourses.

E. Timber wasted in tops, timber wasted by careless or improper bucking, timber broken in careless felling, and any timber merchantable according to the terms of this Agreement which is cut and not removed from any portion of the cutting area when operations on such portions are completed, or before this Agreement expires or is otherwise terminated, unless such wastage or nonremoval involves small amounts, and in the judgment of the Timber Sale Officer, is justified by existing conditions, shall be paid for at double the stumpage price in this Agreement. The amounts herein specified shall be regarded as liquidated damages as it will be impractical or extremely difficult to fix the actual damage.

Unless extension of time is granted by the Director of Forestry and Fire Protection, the right, title and interest to any timber for which payment has been made under the provisions of this section shall revert to the STATE without compensation unless it shall have been removed from any portion of the sale area accepted by the Sale Officer by the date of that acceptance as designated in accordance with provisions hereunder.

F. Cull logs or conifer species not merchantable as defined in the Agreement, removed in separate truck loads from the sale area at the request of the PURCHASER and with the prior written approval of the STATE, shall be paid for at the rates set forth in Exhibit B, “Budget Detail and Payment Provisions, Item A. “Payment Schedule”.

G. When approved in writing by the STATE, hardwood trees felled, knocked down or damaged by logging operations may be removed by the PURCHASER under conditions prescribed by the STATE. Hardwoods removed from the sale area shall be paid for at the rates set forth in Exhibit B, “Budget Detail and Payment Provisions, Item 2A. “Payment Schedule”.

13. <u>TIMBER HARVEST PLAN</u> (1-12-101 MEN)

A. The Forest Practice Rules for the Coast Forest District, and the Timber Harvesting Plan for this timber sale (THP number 1-12-101 MEN), are hereby made a part of this Agreement, and the PURCHASER agrees to comply with each and all of the terms thereof in the same manner as if said Timber Harvesting Plan and Rules and each thereof were set forth at length in this Agreement. Rules or regulations which become effective during the term of this agreement, and any amendments to the Timber Harvesting Plan, shall be adhered to by the PURCHASER to the extent required by law.

Operating conditions and specifications shall be modified as required to comply with changes in the legal status of, or in the laws pertaining to protection measures for, any species under the federal Endangered Species Act. Such modifications shall be agreed upon mutually by the STATE and the PURCHASER.

Timber operations required under this Agreement shall be conducted by a Licensed Timber Operator. On completion of timber operations satisfactory to the Timber Sale Officer on that portion of the Timber Harvesting Plan area for which each Operator is responsible, the Operator shall certify by letter to the STATE that all operations are complete and that they comply with the Forest Practice Rules and the Timber Harvesting Plan. The STATE may prepare annual partial completion reports when it is in the STATE's interest to do so.

Forest Practices and operational procedures in addition to those set forth in the said Rules and Timber Harvesting Plan shall be required as follows:

1) A pre-work conference to be attended by representatives of the STATE, the PURCHASER, and all timber operations subcontractors is required before any timber harvesting activities may begin. A detailed logging plan

EXHIBIT A
(Scope of Work)

for the sale area shall be prepared and submitted by the PURCHASER to the Timber Sale Officer for approval at least two working days prior to the pre-work conference. The logging plan shall include the locations of any proposed new landings and roads not anticipated in the Timber Harvesting Plan; a schedule of road construction, felling, logging, cleanup, and other operations within the sale area; and the number, types and special requirements of the equipment to be used in the sale area.

Also required are pre-work conferences for any other projects associated with this Agreement, with attendance by representatives of the STATE, the PURCHASER, and all project subcontractors. The PURCHASER is responsible for ensuring that all contractors are provided with relevant portions of any applicable documents, including the Timber Harvesting Plan, the Timber Sale Agreement, and permits from other agencies.

The PURCHASER shall notify the Timber Sale Officer of any changes in the numbers or types of logging equipment or personnel assigned to the sale area that may affect productivity.

2) All logging operations shall be by natural logging areas and in an efficient, orderly, and progressive manner, unless otherwise approved by the Timber Sale Officer. The STATE may designate the sequence in which the units are to be logged.

   No timber operations shall be conducted after January 31 of any year until the STATE completed required surveys for northern spotted owls, and extension of the No-Take determination has been received from the appropriate reviewing agency. Presence of owls in or near the sale area may impact the conduct, extent or timing of harvesting operations.

   Limited timber operations are allowed between November 15 and April 1; all timber operations shall comply with the seasonal operating restrictions described in the Timber Harvesting Plan.

3) In the sale area not designated for skyline yarding, any method of yarding other than by means of crawler tractor or rubber-tired skidder shall be employed only with the advance approval of the Timber Sale Officer, and under such conditions and restrictions as may be required. Equipment used for skidding logs shall be equipped with winches and fair-leads. Grapple skidding equipment may be used only with the advance approval of the Sale Officer.

   The locations of all existing skid trails to be reused and new skid trails to be constructed shall be flagged by the Timber Operator at least two weeks prior to their intended use, failure to do so by the LTO may result in unnecessary delay in harvesting. Timber Sale Officer will be notified when an area has been flagged for skid trails and landings and location approval by the Sale Officer is required prior to use. If timber felling substantially obliterates skid trail flagging, the Timber Operator shall reflag the locations of approved skid trails prior to their construction or reuse. Heavy equipment shall not be operated within cable areas, equipment exclusion zones, or equipment limitation zones unless their use is in compliance with the Timber Harvesting Plan and approved by the Sale Officer.

4) The width of tractors or other equipment used for skidding purposes shall not exceed 10 feet 6 inches without written permission of the Sale Officer. Rubber-tired equipment shall not be operated off of approved skid trails and truck roads. Tracked equipment shall not be operated off of approved skid trails or roads unless specifically authorized in each case by the Sale Officer.

5) Minimum distance permitted between new skid trails will be 100 feet measured along the surface of the ground unless specifically waived in each case by the Sale Officer.

   Tractors shall not be used to forward logs on well established truck roads (bed and grade established) unless specifically approved by the Sale Officer.

EXHIBIT A
(Scope of Work)

At all times of the year, erosion control structures shall be installed on all skid trails and temporary or seasonal truck roads within 30 days of completion of their use, or at the end of the day if the U. S. Weather Service forecast is a "chance" (30 percent probability or more) of rain before the next working day, or at any time that the equipment needed to install such structures leaves the sale area.

The Timber Sale Officer may suspend timber operations in whole or in part when environmental damage may result from the operation of equipment in logging or hauling the timber included in this Agreement. Operations shall not resume until approval is given by the Sale Officer.

6) No unnecessary damage shall be done to regeneration, hardwoods, and leave trees. To the greatest extent feasible, leave trees greater than 12 inches DBH shall not have bark torn back from the bole of the tree by log skidding equipment, whether by ground-based or skyline yarding equipment. Leave trees damaged in logging shall be cut and paid for, if so required by the Timber Sale Officer. Trees specifically marked for leave, and all unmarked trees in watercourse and lake protection zones, shall be protected to the fullest extent feasible.

7) Each merchantable tree that is felled shall be bucked to log lengths, limbed to the 6-inch top, and the top bucked at the time of felling. This requirement shall apply to marked trees and also to any unmarked trees felled for safety reasons, in clearing for road or landing construction, as directed by the Timber Sale Officer for cutting of damaged trees, or as otherwise necessary for the conduct of harvesting operations.

8) All slash created by timber operations within 100 feet of Road 500 shall be lopped to the extent that no portion shall remain over 24 inches above the ground. Prior to October 15 of each operating season, and concurrent with lopping activities conducted after that date, slash and other logging debris shall be removed from truck road surfaces, cut banks, ditches and berms, and from the inlets and outlets of culverts, unless otherwise directed by the Timber Sale Officer.

9) To reduce fire hazards, concentrations of slash and logging debris created by the logging operations around landings or located within the sale area, where designated, landing slash shall be placed to block skid trails where they lead onto truck roads or landings, or shall be spread along skid trails and packed by dozer track to reduce erosion or shall be spread along spur roads or road segments and packed by dozer as approved by the Timber Sale Officer. The PURCHASER will maximize the extent of spreading slash to avoid or minimize the need for piling and isolating slash for burning. The PURCHASER may utilize other methods as an alternative to slash treatment (i.e. chipping) upon approval by the STATE. If piling of slash cannot be avoided, each slash pile and the location of slash piles must be approved by the Timber Sale Officer. Piles shall be kept substantially free of soil. On slopes greater than 20% where piles are to be burned, they shall be isolated by building a 10-foot wide fire line to mineral soil using hand tools. On slopes of 20% or less a dozer may be used to build the fire line. Fire lines shall be waterbarred at the time of construction. The PURCHASER shall provide a sufficient quantity of 80 lb water resistant kraft paper and shall cover a minimum 10-foot by 20-foot section near the center of each pile, weighting the paper adequately to hold it in place during windy weather.

   In order to utilize wood residues and reduce fire hazards, logging wastes on landings on permanent and seasonal roads shall be segregated into large materials which can be utilized by firewood cutters, and other wastes such as bark, branches, etc. For the purposes of this section, material at least 8 inches in diameter and 6 feet in length shall be considered suitable for firewood. On completion of use of each landing, firewood material shall be placed in a stable position where it can be reasonably utilized by firewood cutters.

10) Section corners, quarter section corners, meander posts and bench marks shall not be destroyed, defaced or removed to another place, nor shall any witness trees be cut or scarred. Should corners, meander posts or bench marks be accidentally destroyed, the PURCHASER shall be responsible for their replacement by a licensed land surveyor, and all notes, plates or records shall be delivered to the STATE for its approval and files.

EXHIBIT A
(Scope of Work)

11) Timber to be harvested in the area designated for cable logging on the attached timber sale map (Exhibit A, Attachment 2) shall be yarded using a standing, live or running skyline system which meets the following requirements:

    a) Holds the skyline carriage stationary until logs are yarded laterally to the skyline corridor.

    b) Can yard laterally a distance of at least 100 feet perpendicular to the skyline corridor.

    c) Supports logs clear of the ground as the carriage moves along the skyline when logs are above Class I or II watercourses and, to the greatest extent feasible, within Class I or II Watercourse Lake Protection Zones to avoid unnecessary damage to riparian soil and vegetation. In other locations, logs shall be yarded with at least one end suspended, provided logs follow directly behind the skyline carriage.

    d) Is capable of yarding for a slope distance of approximately 1,500 feet from the landing, and which can reach a slope distance of approximately 2,000 feet to the tailhold.

    e) Can be used to pull trees against their lean.

    The practice of tight-lining to move yarder lines to their next position shall not be used.

12) The locations of all cable corridors shall be flagged and mapped by the Timber Operator for approval by the Timber Sale Officer prior to rigging. The distance between corridors shall not be less than 200 feet at the back of the cable road without approval of the Sale Officer. Specific approval from the Timber Sale Officer is required for backside yarding across any designated watercourse.

13) Except in the Watercourse and Lake Protection Zone, unmarked trees within approved yarder cable corridors may be felled before rigging and yarding, but not to exceed a pre-cut corridor width of 10 feet as determined by the centerline of the entire corridor from the yarder location to the tailhold, or wider if approved in advance in each case by the Sale Officer. Within the Watercourse and Lake Protection Zone, only those trees which directly interfere with the movement and safe operation of yarding cables may be cut. [Trees may not be cut within a WLPZ of a Class I watercourse].The Sale Officer may specify that such corridor trees felled within the WLPZ be left on the ground, and if provided for in the Timber Harvesting Plan, that they be felled towards or across the watercourse. Trees leaning into or over the corridor may be felled only if they jeopardize the safety of the operation. Unmarked trees removed from the yarder cable corridors shall be logged and paid for at the same rate as marked timber. Trees pulled over during cable logging operations shall be bucked to log lengths, with the roots and top removed, before yarding.

14) All rigging shall be slung on stumps as far as practical. With the advance approval of the Sale Officer, leave trees may be used as spar trees or felled to provide suitable stumps for rigging purposes, provided that the merchantable timber in such trees shall be paid for by the PURCHASER in full at the rate set forth in Exhibit B, Section 2. Spar trees shall be felled following their use as spar trees except where not required by the Sale Officer. With advance approval, the PURCHASER may utilize fabric straps on standing trees in lieu of cable straps for tail hold, guy anchor, or spar tree rigging, where such use of standing trees is in compliance with applicable safety regulations.

    The PURCHASER may be required to rig tail trees or lift trees to overcome difficult deflection situations.

15) Any use of tractors in the area designated for skyline yarding shall have prior written approval of the Sale Officer, and must be provided for in the Timber Harvesting Plan. Throughout the sale area, red and white striped flagging marks the limit beyond which heavy equipment may not travel without approval. These limits are shown on the attached maps (Exhibit A, Attachment 2) and where mapped adjacent to a road or landing, the travel limit for heavy equipment is the road or landing.

EXHIBIT A
(Scope of Work)

16) The PURCHASER and PURCHASER's agents may post temporary signs in order to display on-site messages (e.g. haul route mile posts, CB channel, etc.). Signs shall be removed once their function is completed, and in all cases before the term of this Agreement. No messages are to be painted on any tree, rock, stump, or other permanent feature.

17) Any flagging used by the PURCHASER in the sale area shall correspond to the table of flagging colors in the Timber Harvesting Plan, or shall otherwise be approved by the Timber Sale Officer.

18) At any time that cable lines cross any Forest road, including roads within the sale area, the PURCHASER shall place warning signs to notify traffic of the location of the lines, and shall block the road or shall have a person stationed on the road to control traffic when lines are being raised or lowered, or when cable road changes are being made. As directed by the Timber Sale Officer, when such roads might be used by other than the PURCHASER or the Sale Officer, the PURCHASER shall either block the road from both sides or provide a flag-person for traffic control.

19) The PURCHASER'S Licensed Timber Operator shall be responsible for maintenance of erosion controls on all skid trails and truck roads used by that Operator until the work completion report for the Timber Harvesting Plan has been approved by the Director of the Department of Forestry and Fire Protection.

20) As called for by the Timber Harvesting Plan or by Department of Fish and Game stream alteration permits, the PURCHASER shall provide and apply seed and straw or slash mulch for erosion control purposes. In addition, bare soil associated with equipment disturbance within WLPZs and ELZs that exceed 100 square feet are to be mulched to achieve at least 95% coverage to a minimum depth of four inches.

21) The PURCHASER shall provide and use trash cans for papers, cans, oil filters and other debris. Broken chokers, wire rope and other debris shall be removed and all trash shall be disposed of at a public disposal facility.

    Within 100 feet of any truck road or log landing, human waste shall be buried immediately at a depth of at least 12 inches. Human waste shall not be deposited within any Watercourse and Lake Protection Zone or any Class III Watercourse Equipment Limitation Zone.

14. <u>HARVEST ONLY DESIGNATED TREES.</u>

The PURCHASER shall cut all and only those trees designated for cutting. No timber shall be removed from the State Forest until scaled or released by the Timber Sale Officer.

Merchantable timber designated for cutting by the Sale Officer for the construction of landings or roads within the sale area or for access thereto, shall be paid for at the rates set forth in Exhibit B, “Budget Detail and Payment Provisions, Paragraph 2. “Payment Schedule”.

15. <u>LIABILITY/DAMAGES PAYMENT RATE.</u>

It is agreed that because of the effect upon the State Forest land as a whole and upon its future productivity and because of the nature of the case, it will be extremely difficult and impractical to fix the actual injury to the STATE by the following type of breaches of this Agreement by the PURCHASER:

A. The failure to remove all merchantable material designated for cutting as agreed herein; and

B. The loss of merchantable timber from fire, or from other injury caused by the PURCHASER or which the PURCHASER might have prevented and by the terms of this Agreement the PURCHASER is required to prevent; and

C. The cutting or severely damaging by logging of leave trees as agreed herein.

EXHIBIT A
(Scope of Work)

And it is further agreed that by reason of such extreme difficulty and impracticability the PURCHASER shall pay to the STATE for such merchantable material the PURCHASER so fails to remove, and for merchantable material so lost or damaged, at double the rate hereinbefore set forth, provided that such payments shall not release the PURCHASER from liability for any damage suffered by the STATE in addition to the value of said trees so not removed or lost or cut or damaged as aforesaid shall be regarded as liquidated damages. In cases of occasional injury as described above and involving small amounts of material only, the Timber Sale Officer will use discretion and judgment in determining whether any breach of contract has occurred within the meaning of this paragraph.

16. PROTECTION OF STATE FOREST INFRASTRUCTURE.

All telephone lines, ditches, pipelines, water developments, power lines, and fences; and all structures, and improvements located within or immediately outside the exterior boundaries of the sale area, shall be protected so far as possible in logging operations, and if damaged, shall be repaired immediately by the PURCHASER at PURCHASER's expense; and the Timber Sale Officer may, when it is necessary, require the PURCHASER to move or cause to have moved, any such lines or fence from one location to another.

Roads shall at all times be kept free of logs, slash and debris resulting from the PURCHASER'S operations hereunder. Any road used by the PURCHASER in connection with this sale that is damaged through such use shall promptly be restored by the PURCHASER to its original or better condition at the PURCHASER's expense.

17. FOREST ROADS.

Logging roads, skid trails, bridges, watercourse crossings, and landings shall be constructed in a manner consistent with the goals of good forest management. Operations in or near sensitive or critical areas will be reviewed and approved by the Timber Sale Officer. The Sale Officer will use whatever means are necessary to insure that operations conform to the approved specifications.

A. Roads and landings to be constructed or reconstructed by the PURCHASER shall be built and maintained in accordance with applicable Forest Practice rules. Except where more specific instructions are given elsewhere in this Agreement or in the Timber Harvesting Plan, roads and landings shall be constructed to the following specifications:

1) Cut and Fill Slopes: Normal fill slopes will be 1½:1 minimum; normal cut slopes will be ½:1, or as determined on a site specific basis by the Timber Sale Officer. In solid rock, and in construction of temporary roads, cut slopes may be steeper. In localized unstable soils, slopes shall be flattened as determined by the Sale Officer, but not to exceed 2:1.

2) Compaction: Structural fill shall be compacted by dozer track in lifts not to exceed eight (8) inches in depth, or by compactor in lifts not to exceed twelve (12) inches in depth. Compaction shall be equal to or greater than the natural state of the soil or a minimum of seventy (70) percent relative degree of compaction. Woody material shall not be deposited in fills.

3) Width: The standard roadbed width for straight road sections shall be 14 feet, including a one-foot shoulder on each side of a 12-foot traveled surface, with additional width on curves as needed to allow passage of log trucks. Roadbed width is measured from the base of the cut slope to the top of the fill slope. The maximum width allowed on minimum-radius switchbacks is 20 feet. Excavation shall be limited to that necessary to construct the minimum road width. New roads constructed wider than these standards shall be narrowed by pulling back excess fill or sidecast and placing it at locations designated by the Timber Sale Officer. Normal spacing for turnouts is 1,000 feet.

EXHIBIT A
(Scope of Work)

4) Radius of Curvature: 50 feet minimum.

5) Construction Method: Excess material shall not be sidecast onto slopes greater than 65%. On side slopes exceeding 50%, new roads shall be full bench construction, keeping sidecast to less than three feet in thickness by drifting excess excavated material along the road surface or utilizing it as fill elsewhere. Length of through-cut sections shall be minimized, and shall in no case be longer than the standard waterbar spacing unless provision is made for disposal of road surface water.

6) Surface Drainage: Unless otherwise specified, roads shall be constructed and maintained with a 2-5% outslope and without a berm or inside ditch. The road surface shall be insloped or bermed only where needed to direct water to a drainage facility or away from a sensitive area. Where grade is 7% or less, permanent and seasonal roads shall have rolling dips incorporated into their running surface during their construction at locations proposed by the PURCHASER and approved by the Timber Sale Officer. Spacing between rolling dips shall be consistent with the waterbreak spacing requirements of the Forest Practice Rules and the Timber Harvesting Plan. Rolling dips shall be constructed in accordance with the attached diagram, Exhibit A, Attachment 2. Where grade of permanent or seasonal roads is more than 7%, waterbreaks or other suitable forms of water dispersal, shall be installed by bulldozer at locations specified or approved by the Sale Officer upon completion of use of the road for log hauling, but prior to final road grading.

7) Landings: The locations and extent of all new landings shall be approved in advance by the Sale Officer.

B. Where the Timber Sale Officer has set construction stakes or marked trees or placed flagging to establish road centerlines and grades or cut and fill markers for road work, culverts, erosion control or other necessary structures, these markers shall constitute the field control by and in accordance with which the PURCHASER shall govern and execute the road or other work as portrayed on such road plans, profiles, or specifications furnished the PURCHASER.

C. Prior to excavation for new road or landing construction, trees and other live woody vegetation greater than four inches dbh within the designated right-of-way shall be felled. Any tree boles or portions thereof six inches in diameter and eight feet in length, or larger, whether merchantable or not, shall be limbed, cut to lengths not exceeding the maximum log length allowed in this Agreement, and removed to landings or to other disposal sites approved by the Timber Sale Officer. Remaining limbs, tops, slash and other woody debris shall not be mixed with or buried by excavated material, but may be windrowed below the toe of the fill or sidecast slope.

All new road construction shall be done by using a hydraulic excavator, or by using a bulldozer equipped with a square or semi-U blade. Provisions elsewhere in this Agreement may further specify the equipment to be used. No material or debris removed from the right-of-way shall be deposited in watercourses or drainage channels. After the road bed has been substantially completed, it shall be given appropriate surface drainage as specified in Paragraph 17.a.(6) above, or as otherwise directed by the Sale Officer. Prior to its use as a log truck access road it shall be shaped and dressed with a grader in conformance with all finish lines, grades and typical cross sections or specifications furnished by the STATE. Side slopes shall be finished in a neat manner with no undercuts or overhanging edges.

D. The PURCHASER shall furnish new corrugated metal or polyethylene pipe culvert, metal downspout, and metal stakes in accordance with the attached culvert materials list (Exhibit A, Attachment 1). The PURCHASER shall provide any additional materials needed to perform the work required below. The PURCHASER shall install culverts and downspouts and do other associated work in locations designated by, and to the specifications of, the Timber Sale Officer and as shown on the attached road work list and map (Exhibits A, Attachments 1 and 2) and culvert installation specifications (Exhibit A, Attachment 1). Any additional culvert or drainage facility material needed for unanticipated road drainage structure installations or to lengthen or enlarge designated installations will be provided by the STATE and shall be installed by the PURCHASER. Any culvert, culvert couplers, or downspout listed in Exhibit A, Attachment 1 which is required to be provided by the PURCHASER and which is surplus following completion of all

EXHIBIT A
(Scope of Work)

specified work shall be retained by the STATE and shall be delivered by the PURCHASER to the STATE'S yard adjacent to the Parlin Fork Conservation Camp within 30 days of completion of log removal from the sale area.

All required culvert installations on existing roads shall be completed prior to log hauling on those roads, and not later than November 15 of the first year of operations in the sale area. Culvert and downspout installations on roads to be constructed shall be concurrent with road construction and prior to their use for hauling timber.

The culvert shall be laid to lines and grades approved by the Timber Sale Officer. Where culverts are being placed in live streams, the flowing water shall be impounded and diverted around the work site, and any other provisions of the Timber Harvesting Plan or Stream Alteration Permit shall be adhered to. Culverts installed as watercourse crossings shall be placed at the grade of the natural stream channel such that downspouting is not needed, unless specified otherwise. Trench width shall be sufficient to accommodate compacting equipment on each side of the culvert. Bedding and backfill material shall be well graded, and shall be substantially free of woody material and large rocks. The culvert bed shall be smoothed to grade and bedding material shall be shaped and packed to provide firm support for the full culvert length. Haunches shall be well compacted, and all backfill shall be compacted in six-inch lifts, using a powered mechanical compacting device.

For installations done after July 15, or at any time that backfill material is too dry for good compaction, backfill shall be watered during placement and compaction to increase its moisture content to an appropriate level for the type of soil.

Where trenches are excavated in existing permanent or seasonal roads for culvert or other work, the disturbed portion of the road surface shall be restored by surfacing with a minimum six-inch compacted layer of 1”-3” coarse crushed rock provided by the PURCHASER. The amount of rock needed for each installation is noted in Exhibit A, Attachment 1. Backfill and rock shall be mounded over the disturbed portion of the road to allow for settling of fill, and a berm shall be constructed as necessary to protect the fill slope from erosion caused by road runoff.

Unless otherwise approved by the Sale Officer, culvert outlets shall be cut back and downspouts installed so that the downspouts are in contact with the ground throughout their entire length. Downspouts shall be secured by wrapping with wire to metal fence pickets driven solidly into the ground. Energy dissipaters made up of suitable native material shall be placed at the outlets of culverts and downspouts, and at culvert inlets as directed by the Sale Officer. Trench construction, pipe bearing surfaces, and back-filling shall be approved by the Timber Sale Officer. The Sale Officer shall be given at least two business days notice of the date(s) of culvert installations.

The PURCHASER shall install a metal fence picket culvert marker at the head of each installed culvert.

All inlets and outlets of existing and installed culverts on any roads used or constructed by the PURCHASER shall be kept open to their full capacity at all times. The PURCHASER shall replace or repair any culverts, downspouts, or culvert location stakes lost, damaged, or destroyed by the PURCHASER's operations. All old culvert and debris resulting from culvert replacement shall be crushed and disposed of by the PURCHASER at a public disposal site.

E. The PURCHASER shall protect existing watercourse crossing structures on State Forest land from any damage that might be caused by PURCHASER's equipment and/or loads in the performance of this Agreement. Any bridge or culvert used by the PURCHASER on State Forest land in connection with this sale that is damaged or injured through such use shall promptly be restored by the PURCHASER to its original condition at the PURCHASER's expense. STATE bridges and culverts are designed for highway loads unless load signs are posted.

F. All Forest roads and landings which are used by the PURCHASER for decking, loading or hauling logs or for other operations conducted under this Agreement, including roads used by timber fallers or rigging crew, and roads used for hauling rock or water for use on the sale area, shall be maintained by the PURCHASER in serviceable condition during and immediately following periods of use at the PURCHASER's expense.

G. Road or landing use shall be discontinued if firm, stable road and landing surfaces acceptable to the Timber Sale Officer cannot be maintained, or if trucks cannot operate under their own power and the PURCHASER shall take

EXHIBIT A
(Scope of Work)

measures necessary to improve the condition of the road or landing. These measures may include stabilizing the road or landing surface with rock and geotextile fabric, or postponing further use of the road or landing until a period of drying allows the surface to become firm and stable. Saturated loose material and fines that accumulate on the road or landing surface shall not be bladed off to permit hauling without specific approval from the Sale Officer in each case. Such material must be bladed back onto the road or landing after it has dried. Additional wet weather road use restrictions appear in Item 18 of the Timber Harvesting Plan.

Truck roads shall be treated for dust control in one or a combination of the following ways:

1) Truck roads will be watered daily and graded as necessary to maintain a good road surface as designated by the Timber Sale Officer. Watering shall be done in the evening or early morning so that water penetrates the road surface before hauling begins, and shall be repeated during the day if necessary to maintain a stable road surface.

2) Truck roads may be treated using lignin or other surfacing chemicals approved by the Timber Sale Officer. Treatment must be in accordance with manufacturer's specifications and reapplied as necessary to maintain a dust-free environment. Any ruts or chuck holes that develop on said roads after surfacing shall be immediately removed by grading or patching. If the PURCHASER is unable to maintain a good road surface by this method, the Sale Officer by written notice may require the PURCHASER to maintain the roads in accordance with paragraph 17.g of this Agreement.

H. Maintenance work shall also be done within 15 days of the end of hauling operations on each road, and immediately on completion of hauling on any road after October 15. Maintenance shall include outsloping or installation or improvement of waterbars, rolling dips, or other road surface drainage facilities as specified by the Sale Officer; final watering and grading to remove ruts and other irregularities that would prevent adequate drainage of the road surface; removal or breaching of berms; and a final clearing of drainage ditches and culvert inlets and outlets as necessary to insure proper functioning of the road drainage system.

I. Where more than one timber sale must use the same road at the same time, the PURCHASER of the sale with the largest estimated timber volume to be removed over that road during the current operating season, as determined by the STATE prior to the start of timber operations, shall have the primary responsibility for routine maintenance (watering and grading) of those roads being used simultaneously, and shall also be responsible for any additional unanticipated work needed to maintain a firm, stable road surface or to provide proper road drainage. The last user of each road each year shall be responsible for the final road maintenance required at the end of the operating season, as described in the paragraph above. Joint road users are encouraged to share routine road maintenance burdens equitably on a basis proportional to actual use. When only one party is using a road then that party is solely responsible for all road maintenance requirements.

J. The PURCHASER shall construct and maintain approximately 2,700 feet of new seasonal truck road as indicated on the attached map (Exhibit A, Attachment 2) to conform to provisions in the Timber Harvesting Plan and to road specifications set forth in paragraphs 17.a through 17.f of this Agreement.

K. At Map Points 1 and 30 as shown on the attached map (Exhibit A, Attachment 2), the new road shall be constructed by an excavator and built as full bench, as described in the Timber Harvesting Plan. Excavated material shall be hauled to spoil sites at locations designated by the Timber Sale Officer. Spoil sites shall be prepared by removal of vegetation and slash, which shall be placed in a location suitable for burning. End-hauled spoils shall be graded to blend with the topography, compacted by dozer or compactor in lifts, and mulched to a depth of two inches with straw provided by the PURCHASER.

L. The PURCHASER shall provide any culvert or other material needed during the course of the operation for temporary truck road or skid trail watercourse crossings. Such crossings shall be removed and the culvert or other material disposed of by the PURCHASER at completion of operations.

EXHIBIT A
(Scope of Work)

M. The PURCHASER shall comply with a Department of Fish and Game Stream Alteration Permit obtained by the STATE. A copy of the approved permit shall be provided by the STATE prior to commencement of permitted activities.

N. The PURCHASER shall, to the satisfaction of the Timber Sale Officer, reinstall an iron pipe gate located on Road 508 near the 508/500 intersection and shown on the accompanying maps (Exhibit A, Attachment 2), and in accordance with the attached gate plan and specifications (Exhibit A, Attachment 2). All gate installations shall be completed by November 15, 2013.

O. The PURCHASER shall provide, haul, place and compact 40 cubic yards of ¾" minus coarse crushed rock for road stabilization at locations specified by the Timber Sale Officer.

P. The STATE may, from time to time, schedule organized public events which require weekend or holiday use of roads used by the PURCHASER within or appurtenant to the sale area. With a minimum of two weeks notice from the STATE, the PURCHASER shall make specified roads available for such use by removing down timber and slash from the road surface, positioning equipment off of the road, and otherwise making the road passable for the designated use.

Q. The PURCHASER shall provide and apply at least one application of calcium lignosulfonate (lignin), or an equivalent dust treatment substance acceptable to the STATE, during each year of operations as called for by the Timber Sale Officer for dust abatement on Forest Road 500. The road length to be treated is approximately 1.5 miles and is located on Road 500 between Road 456 and Hwy 20. The road shall be prepared by ditch maintenance, watering, shaping, and grading as needed prior to each application.

If lignin is used, it shall be diluted with water to a 10% solution prior to application and shall be applied according to manufacturer's recommendations at the rate of 0.25 gallon per square yard to the full width of the road. It will likely take several passes during each scheduled application to achieve the final application rate. It is estimated that each complete application will require a minimum of 3,600 gallons (approximately 18 tons) of product.

The application shall be completed within two weeks of being called for by the Sale Officer.

18. <u>HEALTH AND SAFETY LAW, TEMPORARY STRUCTURES.</u>

No permanent structures shall be allowed on State Forest land. Temporary structures shall be kept to a minimum necessary for the logging operation and shall be maintained at PURCHASER'S expense. They shall be located, built to standards, and operated as may be required by the Timber Sale Officer to prevent the pollution of the water in any watercourse. Outhouses and toilets shall be constructed and maintained so as to prevent, so far as possible, the breeding of flies or the development of unsanitary conditions. The PURCHASER shall abide by all Health and Safety Laws of the State. All structures shall be removed when cutting is completed or the sale terminated, and the grounds cleaned up to the satisfaction of the Sale Officer.

19. <u>FOREST FIRE SUPPRESSION.</u>

During the time that this Agreement remains in force, the PURCHASER shall independently of STATE effort do all that can be done to prevent and suppress forest fires on the sale area and shall require all employees, agents, contractors, subcontractors, and employees of contractors and subcontractors to do likewise.

Unless prevented by uncontrollable circumstances, the PURCHASER shall place all employees, agents, contractors, subcontractors, and employees of contractors and subcontractors, and their equipment at the disposal of any authorized representative of the Director of Forestry and Fire Protection for the purpose of fighting forest fires on or adjacent to the State Forest, with the understanding that where fire fighting services are not rendered on the sale area of the PURCHASER, payment to the PURCHASER, and to employees, agents, contractors, subcontractors, or employees of contractors and subcontractors of the PURCHASER by the STATE for such services shall be made at standard rates

EXHIBIT A
(Scope of Work)

established by the Director of Forestry and Fire Protection where such services are specifically ordered or requested by the Department of Forestry and Fire Protection Officer in charge of the fire; provided further, however, that no payment shall be made by the STATE to the PURCHASER if said fire occurred or spread as the result of violation of law, Forest Practice Rules, or actionable negligence attributable to the PURCHASER, or to employees, agents, contractors, subcontractors, or employees of contractors and subcontractors of the PURCHASER.

In cases where fires occur upon the sale area or spread across the sale area from an adjacent area, the PURCHASER will bear all expenses incurred in action taken upon the fire prior to the arrival of the Department Officer in charge of the fire. Upon arrival of the Department Officer in charge of the fire the PURCHASER, and employees, agents, contractors, subcontractors, or employees of contractors and subcontractors of the PURCHASER, may be reimbursed by the STATE for fire fighting services rendered by them in response to specific orders and requests made by the Department Officer in charge of the fire at the rates provided for in the second paragraph of this section; provided further, however, that when the fire has been surrounded by control lines, the PURCHASER will assume all costs of patrol until the fire is declared to be out by the State Forest Ranger in charge of the fire protection in the area and provided further, that in the event said fire has occurred or spread as a result of violation of law, Forest Practice Rules, or actionable negligence of the PURCHASER, or employees, agents, contractors, subcontractors, or employees of contractors and subcontractors of the PURCHASER, then the PURCHASER shall not be reimbursed in any amount by the STATE for services rendered by PURCHASER, or by employees, agents, contractors, subcontractors, or employees of contractors and subcontractors of the PURCHASER, in control of the fire.

When the STATE becomes legally obligated by contract expressed, implied or otherwise, to make payment for any fire fighting services under the second and third paragraphs of this section and the said fire occurred or spread as the result of violation of law, Forest Practice Rules, or negligence attributable to the PURCHASER, or to employees, agents, contractors, subcontractors, or employees of contractors and subcontractors of the PURCHASER, said PURCHASER shall reimburse the STATE for that payment.

The provisions of this section shall not be construed as relieving the PURCHASER of fire suppression costs for which the PURCHASER is otherwise liable under State law.

20. <u>WATER WAGON.</u>

In addition to the required complement of fire tools, during the period specified by law, the PURCHASER shall have readily available to the sale area for fire suppression purposes a "water wagon" or similar self-propelled vehicle of at least 1,000 gallons capacity which shall be maintained in good operating condition. This unit shall be kept filled to capacity except when in actual physical use on the logging operation and equipped with at least 150 feet of serviceable 1½ inch fire hose with National Standard thread fittings and a serviceable nozzle for said hose; and further, said unit shall be equipped to draft water from a stream or pond as well as to pump water from the tank mounted on the vehicle.

21. <u>TIMBER, STATE PROPERTY UNTIL PAID IN FULL</u>.

All timber included in this Agreement shall remain the property of the STATE until paid for in full by the PURCHASER in the manner hereinbefore set forth, provided that the risk of loss thereof, by fire or otherwise, after operations have begun with reference to the particular logging area, shall be on the PURCHASER.

EXHIBIT A, Attachment 1
(Additional Specifications)

1. CULVERT:

ITEM	MATERIAL	GAUGE alum/galv	DIAM.	PIECE LENGTH	PIECES	TOTAL LENGTH
Pipe	metal or poly	16/16	18”	20’	10	200’
Coupler	per pipe	--	18”	--	5	--
Pipe	metal or poly	16/16	30”	20’	10	200’
Coupler	per pipe	--	30”	--	5	--
Pipe	aluminum	--	42”	20’	3	60’
Coupler	per pipe	--	42”	-	2	--
Pipe	aluminum	--	48”	20’	3	60’
Coupler	per pipe	--	48”	-	2	--

* Polyethylene culvert material shall be high density polyethylene plastic. Pipe shall have annular corrugations and an interior liner. The PURCHASER must submit product description and specifications to the Timber Sale Officer for approval before delivery or installation.

2. OTHER MATERIALS TO COMPLETE THE WORK LISTED:

ITEM	QUANTITY
Fence posts, steel, six-foot	11 ea.
Crushed rock ¾” minus	40 yd^3
Crushed rock, 1”-3”	150 yd^3
Cobble, 6-12”	125 yd^3
Riprap	300 tons
Straw	10 bales
Lignin or equivalent	3,600 gallons (approximately 18 tons)

A sufficient quantity of bolts, nuts, washers, and 12 gauge wire to install coupling bands and attach downspout stakes to the satisfaction of the Timber Sale Officer.

3. Additional materials may be needed to comply with other sections of the Timber Sale Agreement.

Acquisition of rock by the PURCHASER for this or any other section of this Agreement shall be consistent with Section 10295.5(a) of the Public Contract Code. If requested by the STATE, the PURCHASER shall provide documentation of such compliance.

EXHIBIT A, Attachment 1
(Additional Specifications)

Map Points, as shown on Exhibit A, Attachment 2, Timber Sale Agreement Map

Map Point	Road Number	Work to be Done
1	new spur	Construct full-bench road for approximately
2	450	Install 18" ditch relief culvert and construct an inside ditch for approximately 30 feet above the culvert. (See Work Order Description Measures)
3	450	Remove ditch relief culvert and install rolling dip. (See Work Order Description Measures)
4	450	Remove ditch relief culvert and install rolling dip. (See Work Order Description Measures)
5	450	Remove ditch relief culvert and install rolling dip. (See Work Order Description Measures)
6	450	Remove ditch relief culvert and install rolling dip. (See Work Order Description Measures)
7	450	Remove ditch relief culvert and install rolling dip. (See Work Order Description Measures)
8	450	Excavate failing culvert and replace with new 18" culvert with critical dip Rock armor the inlet and outlet for the culvert and install energy dissipater (rock or woody debris) in the channel. (See Work Order Description Measures)
9	450	Remove ditch relief culvert and install rolling dip. (See Work Order Description Measures)
10	450	Remove ditch relief culvert and install rolling dip. (See Work Order Description Measures)
11	450	Remove ditch relief culvert and install rolling dip. (See Work Order Description Measures)
12	450	Install 18" ditch relief culvert and install rolling dip. (See Work Order Description Measures)
13	450	Remove ditch relief culvert and install rolling dip. (See Work Order Description Measures)
14	450	Excavate culvert and realign channel across road. Install new 30" culvert with critical dip. Rock armor the inlet and outlet of the culvert and install energy dissipater (rock or large woody debris) in the channel. Also, at the site of excavated culvert, disconnect the inside ditch and install rolling dip. (See Work Order Description Measures)
15	450	Excavate failing culvert and replace with new 18" ditch relief culvert. (See Work Order Description Measures)

EXHIBIT A, Attachment 1
(Additional Specifications)

16	450	Remove ditch relief culvert and replace with new 18” culvert. Rock armor the inlet and outlet of the culvert and install energy dissipater. Remove perched fill. (See Work Order Description Measures)
16.1	450	Realign channel across road and install new 30" culvert with critical dip. Rock armor the inlet and outlet of the culvert and install energy dissipater (rock or large woody debris) in the channel. Rock armor shall consist of 12 to 18 inch rock extending down the fill slope about 20 slope feet. (See Work Order Description Measures and Geology Recommendations in THP.)
17	450	Remove ditch relief culvert and install rocked rolling dip. (See Work Order Description Measures)
18	450	Remove ditch relief culvert and install rolling dip. (See Work Order Description Measures)
19	450	Remove ditch relief culvert and install broad based dip. (See Work Order Description Measures)
20	450	Excavate failing culvert and replace with new 30" culvert with critical dip. Rock armor the inlet and outlet of the culvert and install energy dissipater (rock or large woody debris) in the channel. (See Work Order Description Measures)
21	450	Excavate failing culvert and replace with new 30" culvert with critical dip. Rock armor the inlet and outlet of the culvert and install energy dissipater (rock or large woody debris) in the channel. (See Work Order Description Measures)
22	450	Excavate failing culvert and replace with new 48" culvert with critical dip. Rock armor the inlet and outlet of the culvert and install energy dissipater (rock or large woody debris) in the channel. Armor the reconstructed fill on the outlet side with large rock >18" average diameter and armor the inlet with >12" average diameter. Armoring shall extend to the hinge-line of the road. (See Work Order Description Measures and Geology Recommendations in THP.)
23	450	Remove ditch relief culvert. Install a rolling dip or waterbar north of the culvert site just above the road segment with a gully running down the road. (See Work Order Description Measures)
23.1	450	Install critical dip
24	450	Remove ditch relief culvert and install rolling dip. (See Work Order Description Measures)
25	450	Remove ditch relief culvert and install rocked ford. (See Work Order Description Measures)
26	450	Remove ditch relief culvert and install rocked ford. (See Work Order Description Measures)

EXHIBIT A, Attachment 1
(Additional Specifications)

27	450	Excavate failing culvert and replace with new 42" culvert with critical dip. Rock armor the inlet and outlet of the culvert and install energy dissipater (rock or large woody debris) in the channel. Armor the reconstructed fill on the outlet side with large rock >18" average diameter and armor the inlet with >12" average diameter. Armoring shall extend to the hinge-line of the road. (See Work Order Description Measures and Geology Recommendations in THP.)
28	450	Remove ditch relief culvert and install broad based dip. (See Work Order Description Measures)
29	450	Remove ditch relief culver and install rolling dip. (See Work Order Description Measures)
30	new spur	Construct full-bench road for approximately 700 feet.
31	new spur	Install temporary crossing (See Work Order Description Measures)
32	455A	Remove perched fill and install rock ford. The channel shall be armored at its lower end from the edge downslope for approximately 20 linear feet using a mix of 12 to 18" rock. The extent of this rock apron is designated with white flagging in the field. This crossing shall only be used for operations for one logging season. (See Work Order Description Measures and Geology Recommendations in THP.)
33	456	Remove shot gunned half-pipe and install energy dissipater (rock or large woody debris)
34	455	Install waterbar or rolling dip above through-cut road section (See Work Order Description Measures).

EXHIBIT A, Attachment 1
(Additional Specifications)

WORK ORDER DESCRIPTION MEASURES

Permanent culvert crossing and ditch relief culverts

- Culvert shall be placed at stream gradient, or have downspouts, or have energy dissipaters at outfall.
- If downspouts are used they shall be secured to the culvert outlet and shall be secure on fill slopes.
- Culverts shall be long enough so that roadfill does not extend or slough past the culvert ends.
- Inlet of culverts and associate fill shall be protected with appropriate measures that extend at least as high as the top of the culvert.
- Outlet of culvert shall be riprapped if roadfill sloughing into channel can occur.
- Where debris loads could endanger the crossing a trash/debris catchment structure shall be constructed upstream of the culvert inlet.
- Bank and channel armoring may be utilized, where appropriate, to provide channel and bank stabilization.
- If operations require moving equipment across a flowing stream, such operations shall be conducted without causing a prolonged visible increase in stream turbidity. For repeated crossings, the operator shall install a bridge, culvert, or rock-lined crossing.
- During construction in flowing water, which can transport sediment downstream, the flow shall be diverted around the work area by pipe, pumping, temporary diversion channel or other suitable means. When any dam or artificial obstruction is being constructed, maintained, or placed in operation, sufficient water shall at all times be allowed to pass downstream to maintain fish life below the dam. Equipment may be operated in the channel of flowing live streams only as necessary to construct the described construction.
- Disturbance or removal of vegetation shall not exceed the minimum necessary to complete operations. The disturbed portion of any stream channel shall be restored to as near their original condition as possible. Restoration shall include the mulching of stripped or exposed dirt areas at crossing sites prior to the end of the work period.
- Structures and associated materials not designed to withstand high seasonal flow shall be removed to areas above the high water mark before such flows occur.
- No debris, soil, silt, sand, bark, slash, sawdust, rubbish, cement or concrete washing, oil or petroleum products, or other organic or earthen material from any logging, construction, or associated activity of whatever nature shall be allowed to enter into or be placed where it may be washed by rainfall or runoff into waters of the State. When operations are completed, any excess materials or debris shall be removed from the work area. No rubbish shall be deposited within 150 feet of the high water mark of any stream.

Fords

- In channel constructed fords shall be of appropriate material that shall withstand erosion by expected velocities and placed in a U-shaped channel to create a drivable crossing.
- If repeated use of the ford by heavy equipment traffic would result in significant downstream transport of sediment, a temporary crossing shall be installed.
- Approaches to ford shall be sufficiently treated with rock to prevent tracking of soil into to the ford crossing.
- Bank and channel armoring may occur when appropriate to provide channel and bank stabilization.
- If operations require moving of equipment across a flowing stream, such operations shall be conducted without causing a prolonged visible increase in stream turbidity. For repeated crossings, the operator shall install a bridge, culvert, or rock-lined crossing.
- During construction in flowing water, which can transport sediment downstream, the flow shall be diverted around the work area by pipe, pumping, temporary diversion channel or other suitable means. When any dam or artificial obstruction is being constructed, maintained, or placed in operation, sufficient water shall at all times be allowed to pass downstream to maintain fish life below the dam. Equipment may be operated in the channel of flowing live streams only as necessary to construct the described construction.
- Disturbance or removal of vegetation shall not exceed the minimum necessary to complete operations. The disturbed portion of any stream channel shall be restored to as near their original condition as possible. Restoration shall include the mulching of stripped or exposed dirt areas at crossing sites prior to the end of the work period.
- Structures and associated materials not designed to withstand high seasonal flow shall be removed to areas above the high water mark before such flows occur.
- No debris, soil, silt, sand, bark, slash, sawdust, rubbish, cement or concrete washing, oil or petroleum products, or other organic or earthen material from any logging, construction, or associated activity of whatever nature shall be allowed to enter into or be placed where it may be washed by rainfall or runoff into waters of the State. When operations are completed, any excess materials or debris shall be removed from the work area. No rubbish shall be deposited within 150 feet of the high water mark of any stream.

EXHIBIT A, Attachment 1
(Additional Specifications)

ROLLING DIP

A rolling dip is a smooth shallow ditch or depression that is at least 6” in depth and should be constructed at an angle of 45 to 60 degrees from the centerline of the road (can be nearly perpendicular). The cross grade should be at least 1 percent greater than the grade of the road. Rock riprap or down-drain flumes may be needed to prevent erosion on outsloped roads (see diagrams below).

Dips should be constructed deep enough into the road subgrade so that traffic and subsequent road grading will not obliterate them. Their length and depth should provide the needed drainage, but not be a driving hazard.

ROLLING DIP DIMENSIONS				
Road Grade (%)	**Upslope approach** (distance from up-road start of rolling dip to trough in feet) **A**	**Reverse Grade** (distance from trough to crest in feet) **B**	**Depth below average road grade at discharge end of trough** (ft) **C**	**Depth below average road grade at upslope end of trough** (ft) **D**
< 6	55	15-20	0.9	0.3
8	65	15-20	1.0	0.2
10	75	15-20	1.1	0.1
12	85	20-25	1.2	0.1
>12	100	20-25	1.3	0.1

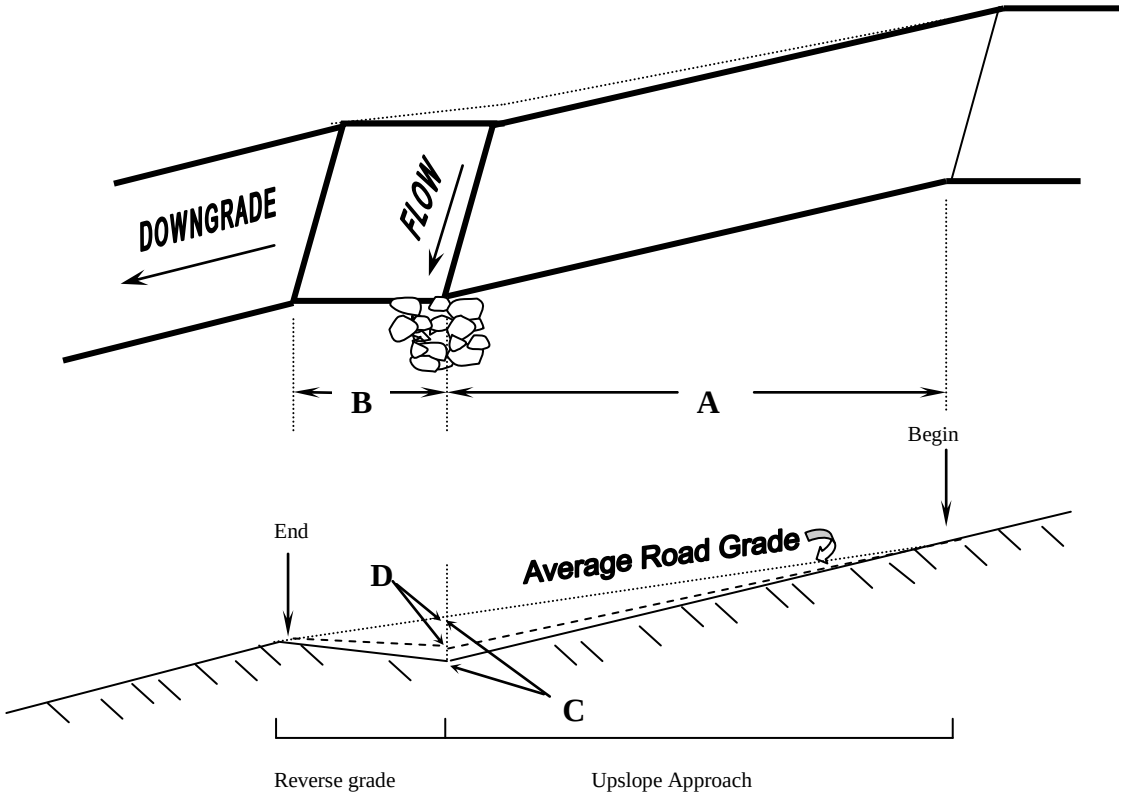

Text and diagrams from W. Weaver and D. Hagans, *Forest and Ranch Roads*, MCRCD, June 1994, pp.

EXHIBIT A, Attachment 1
(Additional Specifications)

- *Gate Plan and Specifications*

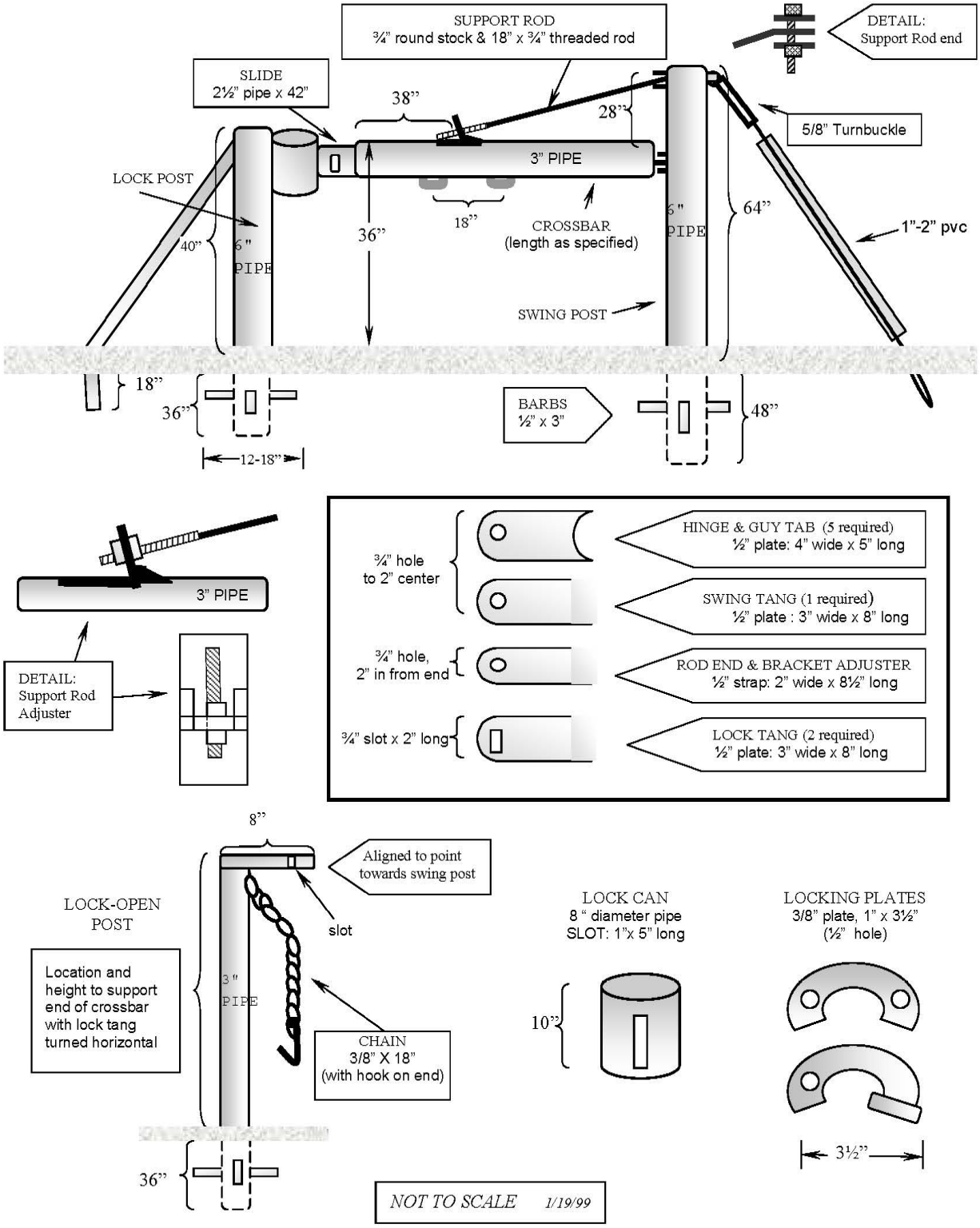

EXHIBIT A, Attachment 1
(Additional Specifications)

MATERIALS	DESCRIPTION
6" heavy wall pipe	swing and lock posts
3" black pipe	Crossbar, lock-open post; barrier posts as needed
42” of 2½" pipe	slide
10” of ¼” x 8" black pipe	lock can
33” of ½" x 4”	Hinges, guy tab, and swing tang
17” of ½” x 2”	Support rod end and adjuster bracket
16” of ½" x 3”	Lock tang & top piece for lock-open post
3" x ½" bar stock	sign board ears
¾” round stock	Support rod
18” of ¾” threaded rod	Support rod- adjustable section
½"-¾” rebar or round stock	Barbs for swing/lock post
¾” x 2½" bolts, nuts, flat washers	Hinges and support rod
1” x 3/8” plate	Locking plates
3" black pipe, rail, or structural steel	lock post braces
18” of minimum 3/8” chain	Chain for lock-open post
hook	Hook for end of chain on lock-open post
½" minimum diameter cable	swing post guy cable
5/8" minimum diameter thread, 10" minimum take-up, galvanized, clevis or eye at both ends	Turnbuckle
5/8" minimum shackle	To attach turnbuckle to guy tab
1”-2” diameter pvc pipe	Cover for guy cable (ground to turnbuckle)
Rust-inhibiting undercoat, tractor yellow enamel topcoat	Coatings
approximately 3-4 cubic yards	concrete

CONSTRUCTION

Fabrication shall be neat and professional. Welds shall be complete, with burrs and sharp edges smoothed. Gate length shall be as specified in the text of the Timber Sale Agreement, or sized to fit the site. The ears shown on the underside of the cross bar are for the purpose of attaching a plywood sign board; they shall each have a ½" x 1½" horizontal slot for bolting the board, and shall be positioned to space the centers of the slots 18" apart.

A ¼” bead shall be welded on the outside of the end of the slide opposite the lock tang, and on the inside of the crossbar at the end opposite the hinge. This will be done to prevent the slide from being pulled all the way out of the crossbar while not inhibiting the slide from moving freely.

INSTALLATION

Holes for hinge and lock posts shall be augered to 12-18" in diameter and 36-48" deep (as specified in the diagram). Concrete shall fill the holes with a mound slightly above the ground. Concrete shall be used to fill the posts to the top. The swing post shall be guyed at an angle no steeper than 45° from horizontal. If no natural anchor is available, a suitable artificial anchor shall be provided. Two rigid diagonal braces shall be attached to the lock post. They shall be of lengths and at angles to best fit the site, and shall have vertical legs set in a minimum of 18" of concrete. Barrier posts set in concrete, or other obstructions such as stumps, logs or boulders, shall be placed as necessary to block any gaps greater than 30" across which motor vehicles, including ATVs, might use to drive around the gate. Installation shall align the lock tang through the center of the slot on the lock can. Between 30 and 90 days after installation, the gate shall be inspected and adjusted or modified as necessary to produce smooth, free-swinging operation that does not require lifting and that allows easy insertion and removal of the locking plate.

EXHIBIT A, Attachment 2
Map

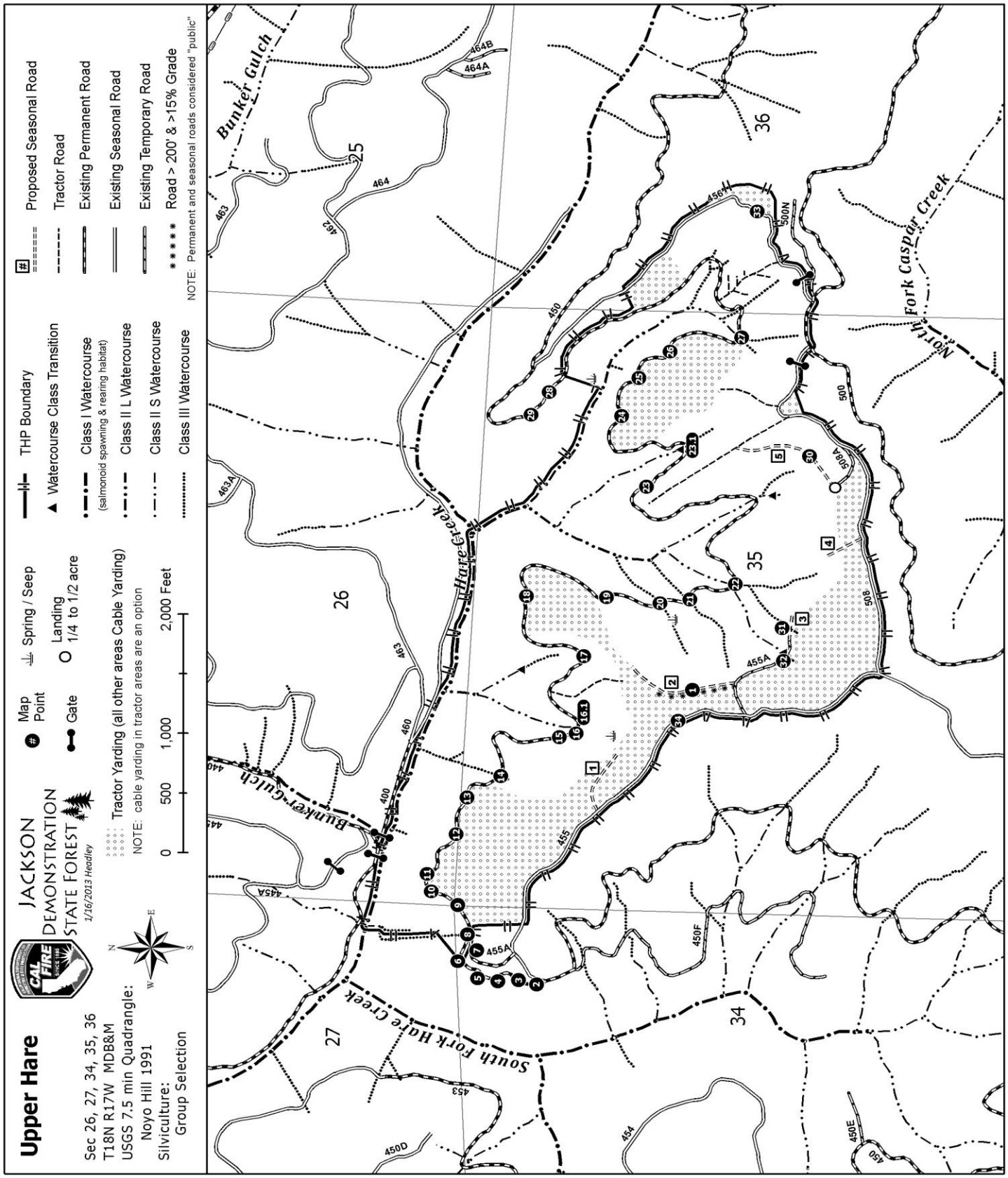

EXHIBIT A, Attachment 3
(Reporting Operating Costs & Daily Water Use Forms)

REPORTING AND OPERATING COSTS FORM

Page ___ of ___ for ACTIVITY: _____ AREA or UNIT: _____

PART 1. EQUIPMENT

Equipment Type	No. of Hours Worked	Rate per Hour	Check if * With Oper.	Total Cost

PART 2. LABOR

Labor Type	No. of Hours Worked Straight	No. of Hours Worked OT	Rate per Hour * Straight	Rate per Hour * OT	Total Cost

* Labor rates, whether with equipment rates or listed separately, must include state comp insurance, benefits, and other employer costs.

PART 3. MATERIALS, SERVICES, OVERHEAD, ETC.

Item	Quantity	Unit	Cost/Unit	Total Cost

Attach additional information as appropriate.

EXHIBIT A, Attachment 3
(Reporting Operating Costs & Daily Water Use Forms)

Daily Water Drafting Log Book

Land Owner:_____

Operator Name: _____

Year: _____

Month: _____

Note: To be filled out when 1) bypass flows < 2.0 CFS 2) pool vol. reduced by 10% 3) pump rate > 350 GPM 4) pump rate > 10% of above surface flow

Drafting Site Location	Day	Time of Day	Filling Time (minutes)	Pump Rate (GPM)	Total Gallons	Screen Cleaned (yes/no)	Screen Conditions	Bypass Flow Observations

EXHIBIT B
(Budget Detail and Payment Provisions)

BUDGET DETAIL AND PAYMENT PROVISIONS

1. BID DEPOSIT/ADVANCE PAYMENT.

The deposit of **$20,000** submitted with the bid for this timber shall be held by the STATE as a guarantee that all periodic payments as called for by the Timber Sale Officer shall be made in advance of cutting of timber referable thereto and for the satisfactory performance by the PURCHASER of all the terms and conditions hereof. If the PURCHASER's bid exceeds the advertised minimum rate by 25 percent, the PURCHASER shall increase the bid deposit to 2.5 percent of the estimated total value of the bid prior to STATE approval of this Agreement. This deposit shall be applied by the STATE to any final payments called for by the Timber Sale Officer upon completion of faithful performance by the PURCHASER. No cutting shall proceed on any trees for which payments have not been made. During active operations, the Timber Sale Officer shall establish a payment schedule based on the estimated rate of cutting. Periodic payments will be required in increments of not less than the value of two weeks of cutting, and shall be based on three-week cutting projections provided to the STATE by the PURCHASER. Cutting projections shall be updated each week by the PURCHASER at the time weekly falling scale is reported, as described in Exhibit A, Section 11.p of this Agreement. Payments shall be made when requested by the STATE. If payment is not received by the date requested, the STATE may suspend the PURCHASER's operations until payment is received.

If legal action by a third party prevents the initiation of timber harvesting activities within 90 days of STATE approval of this Agreement, the PURCHASER may request and the STATE will approve the termination of the Agreement without prejudice, and the STATE will return the PURCHASER's performance security and bid deposit(s), not including any accrued interest. The PURCHASER's written request for termination must be submitted within the 90-day period and must reference this condition of the Agreement.

2. Payment Schedule

A. For final payment, all merchantable material in accordance with the terms and conditions stated herein, and upon receipt of the Timber Sale Cutting Report, the PURCHASER agrees to compensate the STATE in accordance with the rates specified as follows based on 100% scale pursuant to the Revised Scribner Log Rule:

Merchantable Species Value	Rate per Mbf
Redwood	$ [/mbf]
Douglas - fir	$ 40/mbf
Grand fir, Western Hemlock	$ 20/mbf

Hardwoods removed from the sale area shall be paid for at the rate of $0.20 per ton.

Cull logs or conifer species not merchantable shall be paid for at the rate of $1.25 per ton, or at $5.00 per thousand board feet gross scale, if scaled.

B. The contractor shall submit periodic advanced stumpage payments based on the estimated three-week rate of cutting. Each payment shall be made for not less than two weeks of cutting. Cutting projections shall be updated each week by the PURCHASER at the time weekly falling scale is reported. Each payment shall contain the following information:

1) The agreement number (8CA02036).
2) The time-period and estimated volume which the payment covers.
3) Timber Sale name.
4) The signature of an authorized representative of the contractor.
5) Certified Small Business or DVBE # if applicable.

EXHIBIT B
(Budget Detail and Payment Provisions)

C. :Payments shall be made to:

California Department of Forestry and Fire Protection
Jackson Demonstration State Forest
Attention: Upper Hare Creek 2013 Timber Sale
802 North Main Street
Fort Bragg, CA 95437

3. <u>Yield Tax Payment.</u>

A. The PURCHASER shall be solely responsible for filing reports with the State Board of Equalization and payment of the timber yield tax levied on timber cut under this Agreement as provided by the Z'Berg-Warren-Keene-Collier Forest Taxation Reform Act, Statutes of 1976, Chapter 176. The PURCHASER'S yield tax payments shall not be credited in any way for timber cut or other obligations of this Agreement.

The PURCHASER further agrees to furnish the STATE copies of the Timber Yield Tax calculations and reporting forms submitted to the Board of Equalization for timber harvested pursuant to this Agreement. Yield tax information shall be provided no later than January 31 for timber harvested during the previous calendar year.

B. By signing this contract, the PURCHASER swears under penalty of perjury that no more than one final unappealable finding of contempt of court by a federal court has been issued against the PURCHASER within the immediately preceding two-year period because of the PURCHASER'S failure to comply with an order of a federal court which orders compliance with an order of the National Labor Relations Board.

EXHIBIT D
(Special Terms and Conditions)

SPECIAL TERMS AND CONDITIONS

1. Excise Tax

The State of California is exempt from federal excise taxes, and no payment will be made for any taxes levied on employees' wages. The State will pay for any applicable State of California or local sales or use taxes on the services rendered or equipment or parts supplied pursuant to this Agreement. California may pay any applicable sales and use tax imposed by another state.

2. Settlement of Disputes

In the event of a dispute, within ten (10) days of discovery of the problem contractor shall file a "Notice of Dispute" with:

Department of Forestry and Fire Protection
Attention: Acquisitions Manager
P.O. Box 944246
Sacramento, CA 94244-2460

Within ten (10) days of CAL FIRE receiving contractor's notice, the contracts manager or designee shall advise contractor of the findings and recommend a method to resolve the dispute. Decision of the contracts manager or designee shall be final.

In the event of a dispute, the language contained within this Agreement shall prevail over any other language including that of the bid proposal.

3. Right to Terminate (SCM 7.85)

The State reserves the right to terminate this agreement immediately if any of the performance criteria are not met. (Refer to GTC, Exhibit C, Item 7. Termination for Cause)

Contractor may submit a written request to terminate this agreement only if the State should substantially fail to perform its responsibilities as provided herein.

4. Potential Subcontractors

Nothing contained in this Agreement or otherwise, shall create any contractual relation between the STATE and any subcontractors, and no subcontract shall relieve the PURCHASER of his responsibilities and obligations hereunder. The PURCHASER agrees to be as fully responsible to the State for the acts and omissions of its subcontractors and of persons either directly or indirectly employed by any of them as it is for the acts and omissions of persons directly employed by the PURCHASER. The PURCHASER'S obligation to pay its subcontractors is an independent obligation from the STATE'S obligation to make payments to the Contractor. As a result, the STATE shall have no obligation to pay or to enforce the payment of any moneys to any subcontractor.

5. Evaluation of Contractor

Performance of the Contractor under this Agreement will be evaluated. The evaluation shall be prepared on Contract/Contractor Evaluation Sheet (STD 4), and maintained in the Agreement file. For consultant agreements, a copy of the evaluation will be sent to the Department of General Services, Office of Legal Services, if it is negative and over $5,000.

EXHIBIT D
(Special Terms and Conditions)

6. Agency Liability

The Contractor warrants by execution of this Agreement, that no person or selling agency has been employed or retained to solicit or secure this Agreement upon agreement or understanding for a commission, percentage, brokerage, or contingent fee, excepting bona fide employees or bona fide established commercial or selling agencies maintained by the Contractor for the purpose of securing business. For breach or violation of this warranty, the State shall, in addition to other remedies provided by law, have the right to annul this Agreement without liability, paying only for the value of the work actually performed, or otherwise recover the full amount of such commission, percentage, brokerage, or contingent fee.

7. Force Majeure

Neither party shall be liable to the other for any delay in or failure of performance, nor shall any such delay in or failures of performance constitute default, if such delay or failure is caused by "Force Majeure." As used in this section, "Force Majeure" is defined as follows: Acts of war and acts of God such as earthquakes, floods, and other natural disasters such that performance is impossible.

8. Contractor Name Change

Contractor shall provide a written notice to the State at least thirty (30) days prior to any changes to the Contractor's current legal name.

EXHIBIT E
(Additional Provisions)

ADDITIONAL PROVISIONS

1. Insurance Requirements.

A. General Provisions Applying to All Policies.

1) Primary Clause - Any required insurance contained in this contract shall be primary, and not excess or contributory, to any other insurance carried by the State.

2) Endorsements - Any required endorsements requested by the State must be physically attached to all requested certificates of insurance and not substituted by referring to such coverage on the certificate of insurance.

3) The Department will not provide for nor compensate Contractor for any insurance premiums or costs for any type or amount of insurance.

4) When Contractor submits a signed contract to the State, Contractor shall furnish to the State a certificate of insurance stating that all required insurance is in effect for the Contractor.

B. General and Commercial Liability Insurance.

Contractor shall provide commercial general liability insurance of not less than $1,000,000 per occurrence for bodily injury and property damage liability combined in effect for the Contractor.

The certificate of insurance will include provisions 1, and 2, in their entirety:

1) That the insurer will not cancel the insured's coverage without 30 days prior written notice to the State.

2) That the State of California, its officers, agents, employees, and servants are included as additional insured, but only insofar as the operations under this contract are concerned.

Contractor agrees that the bodily injury liability insurance herein provided for shall be in effect at all times during the term of this contract. In the event said insurance coverage expires at any time or times during the term of this contract, Contractor agrees to provide at least 30 days prior to said expiration date, a new certificate of insurance evidencing insurance coverage as provided for herein for not less than the remainder of the term of the contract, or for a period of not less than one year. New certificates of insurance are subject to the approval of the Department of General Services, and Contractor agrees that no work or services shall be performed prior to the giving of such approval. In the event the Contractor fails to keep in effect at all times insurance coverage as herein provided, the State may, in addition to any other remedies it may have, terminate this contract upon occurrence of such event.

C. Worker's Compensation Insurance.

Contractor shall provide Worker's Compensation Insurance with Waiver of Subrogation in favor of the State of California. Employer's liability shall be not less than $1,000,000.00. The following clause should be included: "Waiver of Subrogation in favor of the State of California or in favor of CAL FIRE:" By signing this Agreement, the Contractor hereby warrants that it carries Workers' Compensation Insurance on all of its employees who will be engaged in the performance of this Agreement. If Staff provided by the Contractor is defined as independent contractors, this clause does not apply.

D. Commercial Automobile Insurance on Owned, Hired, and/or Non-Owned vehicles.

Contractor shall provide Commercial Automobile Insurance on Owned, Hired, and/or Non-Owned vehicles of not less than $1,000,000.00 policy.

EXHIBIT E
(Additional Provisions)

2. Regulations.

A. Contractor shall observe and comply with all federal, state, city, and county laws, rules or regulations affecting the work. Any work done that does not comply with any laws, rules, or regulations will be remedied at the Contractor's expense.

B. Contractor shall cooperate with the Department of Forestry and Fire Protection (CAL FIRE) authorities and shall observe and comply with all regulations presently in force on Department of Forestry and Fire Protection grounds.

C. The PURCHASER, in all activities under or pursuant to this Agreement, as well as in handling, reselling or otherwise dealing with respect to the timber and other material realized by the PURCHASER by reason of this Agreement, whether such timber and other material is in its original form or in a changed form, agrees to comply in all respects with all lawful acts, rules, regulations and directions of any legislative, executive, administrative or judicial body or officer exercising any power of regulation or supervision with respect to such matters and whether arising out of the provisions of this Agreement or otherwise.

D. The PURCHASER shall comply with all applicable State Safety Orders, Title 8, California Code of Regulations.

E. The PURCHASER and PURCHASER's employees, agents, contractors and subcontractors shall comply with the attached Digest of Laws Related to Association with Prison Inmates, Exhibit F.

F. No provision of this Agreement shall authorize the PURCHASER or PURCHASER's agents or servants to act as an officer, agent, or employee of the STATE.

G. If the PURCHASER breaches any of the provisions of this Agreement, the STATE may serve written notice of such breach upon the PURCHASER, and thereupon the STATE may suspend the operations of the PURCHASER hereunder until such time as such breach is remedied, and if such breach is not remedied within ten days, the STATE may, at its option, without further notice, terminate this Agreement.

3. License and Permits.

A. The Contractor shall be an individual or firm currently licensed to do business in California and shall obtain at his/her expense all license(s) and permit(s) required by law for accomplishing any work required in connection with this contract. In the event the Contractor fails to keep in effect at all times all required license(s) and permit(s), the State may, in addition to any other remedies it may have, terminate this contract upon occurrence of such event.

B. If you are a Contractor located within the State of California, a business license from the city/county in which you are headquartered is necessary however, if you are a corporation, a copy of your incorporation documents/letter from the Secretary of State's Office can be submitted. If you are a Contractor outside the State of California, you will need to submit to the California Department of Forestry and Fire Protection Contracts Unit a copy of your business license or incorporation papers for your respective State showing that your company is in good standing in that State.

4. Performance Bond.

As further guarantee of a faithful performance of the conditions of this Agreement, the PURCHASER delivers herewith a faithful performance bond, or approved alternate form of security, satisfactory to the STATE in the sum of **$50,000**. Upon satisfactory completion of all timber harvesting activities, the PURCHASER may request a one-time reduction of this security to an amount determined by the STATE to be sufficient to cover all remaining provisions of this Agreement.

Alternate forms of security in lieu of a performance bond are:

EXHIBIT E
(Additional Provisions)

A. Certificate of deposit with the California Department of Forestry and Fire Protection as payee, issued by a bank or similar financial institution which is a member of the Federal Reserve System or is insured by the Federal Deposit Insurance Corporation.

B. Irrevocable letter of credit issued by a bank or financial institution which is a member of the Federal Reserve System or is insured by the Federal Deposit Insurance Corporation.

All bonds, letters of credit, or certificates of deposit, must be in a form acceptable to the STATE.

The PURCHASER agrees that all monies deposited and the faithful performance bond, or security, delivered under this Agreement may, upon failure on the PURCHASER's part to fulfill all and singular the requirements herein set forth or made a part hereof, may be retained by the STATE to be applied as far as may be to the satisfaction of the PURCHASER's obligations assumed hereunder, without prejudice whatever to any other rights and remedies of the STATE. As soon as the STATE determines that security for the performance of the terms of this Agreement or provisions for the settlement of claims or for damages incident thereto is no longer necessary to be retained or made, any balance of the initial deposit that may be left after applying it to any payment due or owing will be returned to the PURCHASER.

5. <u>SB/DVBE Activity Reports</u>

The Contractor is required to furnish the Department with reports of SB and/or DVBE subcontractor activity. Reports are to be made on a semi-annual basis and must identify the subcontractor, the services performed or commodities used and the total paid to the subcontractor during the period reported. A final activity report is to be submitted prior to the contract expiration date. If multiple SB and/or DVBE subcontractors are providing services or commodities, the Contractor must furnish individual reports for each SB and/or DVBE used.

Reports are due on June 15th and November 1st for each year the contract is in place. At the Department's request, the Contractor shall submit copies of the SB and/or DVBE subcontractor's paid invoices issued for that semi-annual reporting period or final report.

If the Contractor fails to furnish the required reports, the Department may withhold final payment until the Contractor provides the required reports and, when requested by the Department, copies of paid invoices.

Final reports must be received by the Department at least 14 days prior to the contract expiration date.

Reports shall be made using the Small Business and Disabled Veteran Business Enterprise Activity Report form, Exhibit E, Attachment 1. All reports shall be made to the Department of Forestry and Fire Protection's SB/DVBE Advocate as follows:

By mail to:

Department of Forestry and Fire Protection
Business Services Office
Attn: SB/DVBE Advocate
P.O. Box 944246
Sacramento, CA 94244-2460

EXHIBIT E
(Additional Provisions)

6. <u>Contractor Certification of Payment to Small Business and DVBE Subcontractor(s)</u>

A. If for this Contract, Contractor made a commitment to achieve small business participation, then Contractor must within 60 days of receiving final payment under this contract (or within such other time period as may be specified elsewhere in this contract) report to the awarding department the actual percentage of small business participation that was achieved (Gov. Code §14841)

B. If for this Contract, Contractor made a commitment to achieve disabled veteran business enterprise (DVBE) participation, the Contractor must within 60 days of receiving final payment under this Contract (or within such other time period as may be specified elsewhere in this Contract) certify in a report to the awarding department: (1) the total amount the prime Contractor received under the Contract; (2) the name and address of the DVBE(s) that participated in the performance of the Contract; (3) the amount each DVBE received from the prime Contractor; (4) that all payments under the Contract have been made to the DVBE; and (5) the actual percentage of DVBE participation that was achieved. A person or entity that knowingly provides false information shall be subject to a civil penalty for each violation not less than $2,500 and not to exceed $25,000. (Military & Veterans Code §999.5(d); Govt. Code §14841)

Contractor Certification must be made using the Department's "Small Business (SB) and Disabled Veteran Business Enterprise (DVBE) Subcontractor Payment Certification" form on Exhibit E, Attachment 1.

EXHIBIT E. Attachment 1

SMALL BUSINESS (SB) AND DISABLED VETERAN BUSINESS ENTERPRISE (DVBE) SUBCONTRACTOR PAYMENT CERTIFICATION

As Contractor of record for the Department of Forestry and Fire Protection, Contract number _____, I certify, in accordance with Government Code 14841 and Military and Veteran Code § 999.5, that pursuant to the terms and conditions of the contract, all payments have been made to the Small Business or DVBE firm(s) listed below for commodities or services rendered as the SB or DVBE subcontractor(s) of record. I understand certification must be made to the Department of Forestry and Fire Protection within 60 days of receiving final payment under this Agreement. I further understand and acknowledge that falsification of this Certification may result in the imposition of civil or criminal penalties for not less than $2,500 or more than $25,000 for each violation.

Please copy this form to include as many Small Businesses or DVBE firms as necessary. Authorized signatures and information are required on each separately submitted form. Return to: Department of Forestry and Fire Protection, Business Services Attn: West Ramsey, SB/DVBE Advocate, P.O. Box 944246, Sacramento, CA 94244-2460

SMALL BUSINESS/DVBE SUBCONTRACTOR INFORMATION

Contract Firm Name			
Name of Firm Representative			
Title			
	Phone:	Fax:	
Firm Address	Street:		
	City:	State:	Zip:
Contract Number			
Total Amount Received Under this Contract	$	Date Final Payment Received: / /	

SMALL BUSINESS/DVBE SUBCONTRACTOR INFORMATION

SB/DVBE Subcontractor	Street Address City State Zip	Amount Paid	Participation Achieved
			%
			%
			%
			%
			%

Printed Name		**Signature:**	
Title:		**Report Date:**	

EXHIBIT F
(Digest of Laws Related to Association with Prison Inmates)

DIGEST OF LAWS RELATED TO ASSOCIATION WITH PRISON INMATES

1. It is a felony for anyone to assist inmates to escape. Bringing firearms, deadly weapons, explosives, or tear gas onto prison grounds, or giving inmates firearms, weapons, explosives, liquor, cocaine or other narcotics, or any kind of drugs, including marijuana, is a felony.

2. Giving letters to inmates or taking letters out for inmates is a misdemeanor. Additionally, do not accept from, nor deliver to, an inmate any message or package.

3. Giving gifts or presents to inmates, or accepting gifts or presents from inmates, is a misdemeanor.

4. Do not permit former inmates or persons of disreputable character to associate with inmates.

5. Do not allow any inmate to use a telephone or other communications device.

6. Do not allow any person not associated with the camp program or work project to associate with inmates or interfere with inmate activity. Visitors must conform to rules stipulated by the person in charge of custody.

7. Do not in any way contact or communicate with families or known associates of inmates for any purpose.

8. No person shall strike or lay hands on an inmate unless it be in defense of himself or unless it be necessary to prevent serious injury to person or property.

9. All persons should avoid becoming involved in the personal affairs of inmates or former inmates.

10. Do not photograph nor allow anyone to photograph inmates, unless permission is obtained in accordance with the Department of Corrections procedures.

11. Refusal of visitors to submit to search and inspection of their person and of vehicles may be cause for denial of access.

EXHIBIT G
(Camp Access)

1 Camp Access Instructions

Individuals who are not employees of the California Department of Corrections and Rehabilitation (CDCR) or the California Department of Forestry and Fire Protection (CAL FIRE), but who are working in and around inmates who are incarcerated within California's camps, are to be apprised of the laws, rules and regulations governing conduct in associating with prison inmates. The following is a summation of pertinent information when non-departmental employees come in contact with prison inmates.

By signing this contract, the Contractor agrees that if the provisions of the contract require the Contractor to enter a camp, the Contractor and any employee(s) and/or subcontractor(s) shall be made aware of and shall abide by the following laws, rules and regulations governing conduct in associating with prison inmates:

A. Contractor, contractor's employee(s) and/or subcontractor(s) shall observe all security rules and regulations and comply with all instructions given by institutional authorities.

B. Contractor and contractor's employee(s), and/or subcontractor(s) must complete and submit a Camp Access Clearance Form prior to providing services. This form must be completed for all persons entering the facility a minimum of ten (10) working days prior to commencement of service. Information may be submitted to the Contract Manager or their designee. Form may be subject to a CDCR California Law Enforcement Telecommunications System (CLETS) check. This check will include Department of Motor Vehicles, Wants and Warrants, and Criminal History checks.

C. All persons entering the facility must have a valid state driver's license or photo identification card on their person.

D. All persons entering into a camp consent to search of their person, property or vehicle at any time. Refusal by individuals to submit to a search of their person, property, or vehicle may be cause for denial of access to the premises.

E. It is illegal for an individual who has been previously convicted of a felony offense to enter into camps without the prior approval of the Warden. It is also illegal for an individual to enter onto these premises for unauthorized purposes or to refuse to leave said premises when requested to do so. Failure to comply with this provision could lead to prosecution.

F. Encouraging and/or assisting prison inmates to escape are a crime. It is illegal to bring firearms, deadly weapons, explosives, tear gas, drugs or drug paraphernalia on camp premises. It is illegal to give prison inmates firearms, explosives, alcoholic beverages, narcotics, or any drug or drug paraphernalia, including cocaine or marijuana.

G. It is also illegal to give or take letters from inmates without the authorization of the Warden. It is also illegal to give or receive any type of gift and/or gratuities from prison inmates.

H. In an emergency situation the visiting program and other program activities may be suspended.

I. CDCR does not recognize hostages for bargaining purposes. CDCR has a "NO HOSTAGE" policy and all prison inmates, visitors, and employees shall be made aware of this.

J. For security reasons, while on camp grounds, Contractor, contractor's employee(s) and/or subcontractor(s) shall be professionally and appropriately dressed in clothing distinct from that worn by inmates at the camp. Visitors must not wear clothing that in any way resembles state issued prison inmate clothing. Specifically orange/red/yellow/white/
chartreuse jumpsuits and/or yellow rainwear shall not be worn onto camp grounds, as this is inmate attire.

K. Unless otherwise directed by the entrance gate officer and/or Contract Manager, the contractor, contractor's employee(s) and/or subcontractor(s) shall enter the camp through the main entrance gate and park private and

EXHIBIT G
(Camp Access)

nonessential vehicles in the designated visitor's parking lot. Contractor, contractor's employees and subcontractors shall remove the keys from the ignition when outside the vehicle and all unattended vehicles shall be locked and secured while on institution grounds.

L. Gate clearance may be denied for the following reasons: Individual's presence in the camp presents a serious threat to security, individual has been charged with a serious crime committed on institution property, inadequate information is available to establish positive identity of prospective individual, and/or individual has deliberately falsified their identity.

EXHIBIT G
(Camp Access)

CAMP ACCESS CLEARANCE FORM

The following information is required of all contractor employees who will be on the property of a CDCR/CAL FIRE Conservation Camp. All applications will be processed for approval.

Name of Company	
Employee	
Date of Birth	
Birth Location & State	
Employee Driver's License	
Social Security Number	
Signature	
Date	