California Department of Forestry and Fire Protection
Jackson Demonstration State Forest

S-A-M-P-L-E TIMBER SALE AGREEMENT

UPPER PARLIN IG 2010

THIS AGREEMENT, made this [date] day of [month], [year], at Sacramento, County of Sacramento, State of California, by and between the State of California, through its duly appointed, qualified and acting Director of Forestry and Fire Protection, hereinafter called the STATE, and [purchaser name] of [address], hereinafter called the PURCHASER.

WITNESSETH, that for and in consideration of the covenants, conditions, agreements, and stipulations hereinafter set forth, the parties hereto agree as follows:

TIMBER SALE LOCATION

1. The STATE agrees to sell to the PURCHASER, and the PURCHASER agrees to purchase from the STATE, all the live timber designated for cutting by the STATE, and merchantable as hereinafter defined, on an area of about 588 acres, designated on the ground by the STATE's assigned Timber Sale Officer prior to cutting in parts of Sections 35 and 36, Township 18 North, Range 16 West, Section 31, Township 18 North, Range 15 West, Section 1, Township 17 North, Range 16 West and Section 6, Township 17 North, Range 15 West, MDB&M, in the Jackson Demonstration State Forest approximately 11 miles east and southeast of Fort Bragg, Mendocino County, California, and as designated on the attached map (Exhibit A) which hereby is made part of this Agreement, at the rate and in strict conformity with the requirements and conditions hereinafter set forth for sawlogs and other merchantable material; the PURCHASER further agrees to do other work as herein specified.

GOOD FAITH PERFORMANCE

By having submitted his or her bid and entering into this Agreement, the PURCHASER hereby declares the intention to timely harvest and removal of the timber designated for cutting within the harvest area described herein. If it appears to the Timber Sale Officer that the PURCHASER does not have a good faith intention to perform the scheduled harvesting, the PURCHASER shall be provided a hearing with a STATE manager who is not directly involved in operations at Jackson Demonstration State Forest in order to provide the PURCHASER with an opportunity to explain why the STATE ought not to terminate the Agreement. The STATE manager who administers the hearing shall consider all documentation and testimony provided by the STATE and the PURCHASER, and such materials shall constitute an administrative record upon which his or her decision shall be entirely based. If the STATE manager determines that the PURCHASER's intent is to not perform the specified

harvesting in a timely manner: 1) the Agreement between the STATE and the PURCHASER shall be immediately terminated based on the PURCHASER's failure to perform substantial and material term(s) of the Agreement, constituting a breach of contract; 2) the PURCHASER shall be liable to the STATE for reasonable damages associated with breach; and 3) the contract may be awarded to the next highest bidder.

This contract includes work to be done as mitigation for the effects of timber operations. This work can include activities in direct mitigation, off site mitigation, or compensation for the impacts of timber operations. It includes road work such as installing watercourse crossings, installing water breaks and rolling dips, and all work done to ensure that timber operations do not result in significant effect on the environment.

The merchantable species, estimated net merchantable amount by the Revised Scribner Log Rule as prepared by the Northwest Log Rules Advisory Group, July 1, 1972, the rate of payment per thousand board feet, and the estimated total value are as follows:

Species	**Estimated Net Volume (Mbf)**	**Rate per Mbf**	**Estimated Value**
Redwood	3,359		
Douglas-fir	1,557	$10.00	$15,570.00
Grand fir, Western hemlock	52	$5.00	$260.00
TOTALS			

All timber removed by reason of this sale shall be 100 percent scaled by a recognized, independent, third party scaling organization at the PURCHASER's expense. Additional provisions governing scaling appear elsewhere in this Agreement.

BID DEPOSIT/ADVANCE PAYMENT

2. The deposit of forty-five thousand dollars ($45,000) submitted with the bid for this timber shall be held by the STATE as a guarantee that all periodic payments as called for by the Timber Sale Officer shall be made in advance of cutting of timber referable thereto and for the satisfactory performance by the PURCHASER of all the terms and conditions hereof. If the PURCHASER's bid exceeds the advertised minimum rate by 25 percent, the PURCHASER shall increase the bid deposit to 2.5 percent of the estimated total value of the bid prior to STATE approval of this Agreement. This deposit shall be applied by the STATE to any final payments called for by the Timber Sale Officer upon completion of faithful performance by the PURCHASER. No cutting shall proceed on any trees for which payments have not been made. During active operations, the Timber Sale Officer shall establish a payment schedule based on the

estimated rate of cutting. Periodic payments will be required in increments of not less than the value of two weeks of cutting, and shall be based on three-week cutting projections provided to the STATE by the PURCHASER. Cutting projections shall be updated each week by the PURCHASER at the time weekly falling scale is reported, as described in Section 7.p of this Agreement. Payments shall be made when requested by the STATE. If payment is not received by the date requested, the STATE may suspend the PURCHASER's operations until payment is received.

If legal action by a third party prevents the initiation of timber harvesting activities within 90 days of STATE approval of this Agreement, the PURCHASER may request and the STATE will approve the termination of the Agreement without prejudice, and the STATE will return the PURCHASER’s performance security and bid deposit(s), not including any accrued interest. The PURCHASER’s written request for termination must be submitted within the 90-day period and must reference this condition of the Agreement.

PRODUCTION RATE/PAYMENT SCHEDULE

3. Unless written extension of time is granted by the Director of Forestry and Fire Protection, at least one million board feet, shall be paid for and cut by and June 30, 2011. This date may be extended or the required volume may be adjusted mutually by the STATE and the PURCHASER due to unforeseen circumstances. All remaining merchantable timber designated for cutting shall be paid for and felled, and all other timber operations shall be completed by November 15, 2012. This Agreement shall terminate on May 15, 2013, by which date all requirements of the Agreement must be completed.

The STATE may grant an extension of operating time to complete operations on terms and conditions as may be specified by the STATE. No extension of the specified payment schedule shall be granted unless the PURCHASER pays, in advance, an interest payment on the outstanding timber value owed the STATE under the contract. Interest shall be payable at 0.60 percent per annum, prorated for the term of the extension. The "outstanding timber value" shall be the original contract timber value established by cruise estimate, or specified portion thereof, less the sum of payments received by the STATE as of the applicable designated payment date. Upon completion of harvesting operations, the STATE shall recalculate the interest due based upon the actual value of timber removed and the actual monthly unpaid balance during the term of the extension and adjust the final payment accordingly. Operating time extensions granted under this provision shall not alter any scheduled progress payments required above. Operating time extensions shall not be granted if said scheduled progress payments have not been received by the STATE, or if any other contractual requirements have not been met by the PURCHASER.

Once timber harvesting operations have commenced, the PURCHASER agrees to continue operations at a normal production level until all contractual provisions are completed unless shutdowns are required by

wet soil conditions, hazardous fire conditions, or are otherwise approved by the Timber Sale Officer.

SALE HARVEST BOUNDARY

4. The boundaries of the sale area have been marked as depicted on the attached map (Exhibit A) and have been examined by the PURCHASER. All trees marked for cutting, whether merchantable or not, shall be felled by the PURCHASER. No dead standing conifer trees or unmarked hardwood trees shall be felled except as provided for elsewhere in this Agreement. The PURCHASER agrees to log the merchantable conifer and hardwood timber designated for cutting as described in this Agreement. The STATE does not guarantee the amount of timber designated in the estimate.

PRODUCTION COST DATA SPECIFICATIONS-DEMONSTRATION

The PURCHASER understands that the primary objective of the STATE in entering into this Agreement to log the sale area, which is a part of the Jackson Demonstration State Forest, an experimental forest of the State of California, is to provide a research and demonstration area and to determine the facts and data concerning the timber sale area and the treatment thereof through the actions of the PURCHASER under this Agreement.

The PURCHASER agrees to keep records and furnish the STATE production and cost data with respect to all timber harvesting operations and other forestry activities conducted pursuant to this Agreement. Required data shall include person-hours and equipment-hours spent on each activity, and applicable rates for employees, machines and supervision, and costs for any materials or services needed for completion of activities required by this Agreement. The information shall be reported on a form provided by the STATE (Exhibit H), or in an alternative format proposed by the PURCHASER and acceptable to the STATE. The requirement for providing production and cost data shall apply equally to any contractors or subcontractors hired by the PURCHASER to complete the projects specified above. This information will be furnished to the STATE before the performance bond or other security is released.

The PURCHASER further agrees to furnish the STATE copies of the Timber Yield Tax calculations and reporting forms submitted to the Board of Equalization for timber harvested pursuant to this Agreement. Yield tax information shall be provided no later than January 31 for timber harvested during the previous calendar year.

The PURCHASER understands that the protection of research and experimental values, the maintenance of low fire hazards, the prevention of injury to trees not designated for cutting, the creation of conditions favorable to the regeneration of the State Forest, and other provisions of this Agreement are for fulfillment of the research and demonstration purpose, and the provisions of this Agreement will be strictly enforced to that end.

The PURCHASER shall maintain the flagged boundaries of the Sudden Oak Death (SOD) study area, consisting of two treatment blocks with three measure plots within each block boundary. Block boundaries are flagged with solid white with orange-checked flagging and plot boundaries are flagged with solid purple flagging. See Exhibit I for SOD study area location and block boundaries. Specifications within block boundaries are as follows:

a. Within the boundaries of each block, the number of skid trails shall be kept to a minimum and no skid trails shall be located within a plot boundary, unless specifically waived in each case by the Sale Officer. Conifers marked for removal shall be felled away from plot locations, to the extent feasible. Hardwoods, including those marked with pink paint, shall not be cut unless necessary for safe operations.

DOMESTIC PROCESSING OF TIMBER and LOG BRANDING

5. The PURCHASER agrees that pursuant to Section 4650.1, Public Resources Code, timber from State Forests shall not be sold to any primary manufacturer, nor to any person for resale to a primary manufacturer, who makes use of such timber at any plant not located within the United States unless it is sawn on four sides to dimensions not greater than 4 inches by 12 inches. The PURCHASER has not sold unprocessed timber harvested from private timberlands and exported it into foreign commerce from California within one year prior to the bid date and agrees to refrain from that activity for one year after contract termination.

The PURCHASER agrees that pursuant to Sections 1515-1521, Title 14, California Code of Regulations, timber in this sale shall not be substituted for timber exported by the PURCHASER obtained from other sources. The PURCHASER further agrees pursuant to Section 1517, Title 14, California Code of Regulations, to give written notice to the STATE of any or all locations where said timber will be processed until such time as the timber has been sawn to dimensions of 4 inches by 12 inches or less. The required written notice shall be provided to the STATE at least one week before commencement of delivery of logs to each processing location.

The PURCHASER as required by the Timber Sale Officer shall identify all timber by making a mark with a brand provided by the STATE in a conspicuous place on the end of each log or piece of timber prior to removal from the sale area. Prior approval must be obtained in writing from the Sale Officer regarding any changes in the brand or branding procedure.

If the PURCHASER sells, exchanges, or otherwise disposes of said timber before it has received domestic processing, the PURCHASER agrees to require each buyer, exchangee, or recipient to execute a written agreement which shall:

a. Specify domestic processing for the timber involved pursuant to Section 4650.1, Public Resources Code.

b. Require the execution of said agreement between the parties to any subsequent transactions involving said timber.

The failure of any party to a transaction involving said timber to execute the required agreement shall constitute noncompliance on the part of the PURCHASER with the terms of this provision.

The PURCHASER shall file with the STATE a copy of each such agreement and shall retain for three years from the date of each transaction the records of all sales, exchanges, or dispositions of such designated timber. Upon request, such records shall be made available to STATE.

Any purchaser of timber from State Forests who makes or permits use of said timber in violation of Section 4650.1, Public Resources Code, or Sections 1515-1521, Title 14, California Code of Regulations, shall be prohibited from purchasing State Forest timber for a period of five years and may have his timber operator license suspended for up to six months.

GENERAL UTILIZATION STANDARDS *(See Item 8 for Specific Standards)*

6. The minimum log dimensions for utilization purposes will be 8 feet in length and 6 inches in small-end diameter. However, any material unmerchantable because of size as herein defined, removed at the option of the PURCHASER, shall be scaled and paid for at the same rate as merchantable material.

Any log segment presented for scaling shall be scaled as merchantable which has a net merchantable volume of at least 10 board feet, provided that the log segment has a net merchantable scale of at least 25 percent of the total volume, and provided that firm stain shall not be regarded as defect and no deduction shall be made for same in scaling.

SCALING SPECIFICATIONS, Items 7a-7p

7. The forest products made and all timber removed by reason of this sale shall be scaled by a recognized independent "third party" scaling organization agreeable to the STATE. Logs will be scaled as presented and results of said scales shall be conclusive and binding upon the PURCHASER and the STATE unless otherwise contested through check scale procedures. Procedures required by the STATE for implementation of "third party" scale shall be as follows:

a. Logs shall be scaled using the Revised Scribner Log Rule as prepared by the Northwest Log Rules Advisory Group, July 1, 1972, making allowances for visible defect in accordance with the scaling practices contained in the latest National Forest Log Scaling Handbook (Chapters 20 and 30).

b. Payment for scaling and reporting services performed by the scaling organization shall be made by the PURCHASER of State Forest timber, and the STATE assumes no responsibility in this regard.

Prior to scaling STATE logs, the STATE will provide the scaling organization with a scaler information sheet. The PURCHASER shall insure that all third party scalers who scale STATE logs delivered from this sale are knowledgeable about contract specifications governing scaling requirements under this Agreement.

c. All loads must be scaled at the first unloading point and within three working days from the date of removal from the State Forest.

d. The scaling organization or the PURCHASER shall notify the State Forest Manager or the Manager's representative of all scaler rotations of one month or more so that the STATE may obtain adequate check scales.

e. Organization scalers shall be required to make a copy of the scale tickets available to the STATE on those loads being check scaled by the STATE.

f. Organization scalers shall perform the following services:

(1) Record log species, diameter, length, and amount of defect on the scale tickets and forward such information to the scaling organization on the day of scaling.

(2) Scale all logs in a load at the same location and time.

(3) Identify with paint those loads that have been scaled and immediately notify the STATE when it is known by the scaler that a load has bypassed or been picked up from the designated scaling location before being scaled. In the event of a missed (non-scaled) load, the PURCHASER shall within five working days account for the load by the following process:

(a) Average the gross volumes and net volumes of four loads hauled immediately prior to and four loads hauled immediately after the missed load. The ticket numbers of the loads used for calculating the averages shall be provided to the STATE for audit purposes.

(b) Find a representative existing scaled load that has a gross volume within one percent of the calculated average gross load volume and a net volume within three percent of the calculated average net load volume. The gross and net volumes of the selected

load must be equal to or more than the calculated averages. If no representative load can be found then a log load scale ticket must be created which meets these specifications. The STATE retains the right of approval on load selection.

(c) Using the trip ticket number of the missed load, insert the scale ticket data of the representative or created load into the scale reporting system. The load shall be included in the 15 day summary covering the time period when the data was inserted into the system. The STATE shall be notified when this occurs.

g. The PURCHASER shall notify the STATE of any change on a scale ticket that affects the volume of the original scale after the copy has been mailed to the STATE.

h. The scaling organization shall process scale tickets of all STATE loads daily and mail, at its expense, copies of daily scale certifications and log listings to the State Forest Headquarters. Also required are semi-monthly scaled volume summaries as of the 15th and the last day of the month. Semi-monthly summaries shall provide gross and net volume totals by species. When adjustments are required to compensate for omissions or errors in daily scaled volume summaries, the STATE may request the scaling organization to issue an adjusted summary report for those specified time periods. The PURCHASER shall also be notified by the STATE when such an adjustment has been made.

i. At least three loads scaled within the previous five operating days shall be left rolled out in the mill yard where scaled to facilitate check scaling.

j. The scaling organization shall conduct a minimum of one check scale per month per scaler during the operating season to document scaler proficiency. Standards for proficiency shall be taken from Section 64 of the National Forest Log Scaling Handbook. Copies of such check scales shall be furnished to the STATE within 10 days of completion of said check scales. The STATE reserves the right to check scale organizational scalers at intervals determined by the STATE.

k. If, through STATE check scales, it is found that a scaler's work is unacceptable, the STATE will notify the scaling organization and the PURCHASER and request a check scale to be submitted to the STATE within 10 working days. Should remedial action fail to achieve correction, the STATE may immediately terminate the acceptance of the scaler's work until the scaler's competence is mutually certified by all concerned parties. PURCHASER scaling complaints shall be jointly and promptly investigated by the STATE and the scaling

organization. The STATE may terminate third party scaling and assume scaling responsibilities at any time if the scaling organization's scale or records are unacceptable to the STATE. The PURCHASER shall pay the STATE a surcharge on stumpage payments of $5.00 per thousand board feet net scale for all timber scaled by the STATE or by a hired agent of the STATE following termination of third party scaling pursuant to this paragraph.

l. The maximum scaling length shall be 20 feet. Greater lengths shall be scaled as two or more logs, making allowance for taper. When the scaling lengths into which a log is divided for scaling are unequal, the longer length or lengths shall be considered as lying in, or toward the larger end of the log. Scaling lengths of multiple length logs shall be computed in accordance with the scaling practices contained in the latest National Forest Log Scaling Handbook.

m. Allowance for trim shall not exceed 6 inches for each 20 feet of length or fraction thereof. Logs overrunning the specified trim allowance shall be scaled to the next higher foot in length.

n. Logs shall be scaled at the small end and the average diameter inside bark taken to the nearest inch. Logs 21 feet and longer shall be measured at both ends and the average diameter inside bark taken to the nearest inch. Taper in logs 21 feet and over will be distributed according to the latest National Forest Log Scaling Handbook (Chapter 10). Taper in butt logs 21 feet and over shall be distributed according to USFS Supplement 4 dated March 1987, for all species as follows:

DIAMETER TAPER FOR BUTT LOGS 21 FEET AND OVER - ALL SPECIES

Log Length	Taper
21 to 27 feet:	2″
28 to 40 feet:	4″
41 to 51 feet:	6″
52 feet and over:	butt measurement required

o. The STATE shall provide the PURCHASER with a sufficient supply of five-part load receipts to identify each load of forest products removed. The fifth copy (card stock) shall be affixed to the load and shall stay with the load until decked. The white original shall be retained in the load receipt booklet and returned to the Timber Sale Officer by the operator as called for.

The PURCHASER may, on approval, provide equivalent load receipts to be used in place of the STATE's form. If the PURCHASER's forms are used, the PURCHASER shall provide to the STATE a sufficient quantity of forms for the estimated volume

to be removed, prior to commencement of operations, forms to then be distributed to the operator by the Sale Officer. The STATE's copies of the load receipts shall remain in the load receipt booklet until collected by the Sale Officer.

To provide additional identification of loads of forest products removed, the PURCHASER shall paint the last three digits of the load receipt number on the rear end of each of the two outside bunk logs of each load. The PURCHASER shall provide for this purpose a sufficient quantity of high-visibility aerosol paint of a quality and color acceptable to the STATE.

p. To facilitate monitoring of periodic sale volume harvested, the PURCHASER shall (1) record unit identification on each log load receipt presented to the STATE, and (2) provide a weekly report of faller days and volume felled by unit. Weekly falling information is to be available for collection by the Timber Sale Officer or delivered to the State Forest headquarters no later than the following Tuesday.

UTILIZATION STANDARDS AND PRACTICES, Items 8a-8g

8. The PURCHASER agrees to the following utilization standards and practices:

a. Only that merchantable downed timber that is designated by the Timber Sale Officer shall be removed, and it shall be scaled the same as timber felled under this Agreement. Other downed timber, whether merchantable or not, shall be left in place, except where it occurs within the clearing limits for construction of truck roads and landings. Snags, whether merchantable or not, shall be left standing unless they must be felled for road or landing construction, for cable corridors, for safety reasons, or for fire protection purposes as designated in the Timber Harvesting Plan or by the Sale Officer.

b. Stumps shall be cut as low as possible and in no case shall be over 12 inches on the uphill side except where more height is needed to save timber or insure safe working conditions. Stumps which are not cut in accordance herewith and which should have been so cut in the judgment of the Timber Sale Officer shall, at the STATE's option, be either recut to 12 inches or less, if redwood, or paid for at the rate of $15.00 each. Such payments shall be regarded as liquidated damages in view of the difficulty of determining the actual damage to the STATE through wastage of the quantity and quality of the material involved.

c. All merchantable conifer trees felled by the PURCHASER shall be utilized to the fullest extent practicable, and at least to a top diameter inside bark of six inches. Maximum log length,

including trim, shall be 41 feet unless longer lengths are approved in writing by the STATE.

d. The PURCHASER shall make every effort to conduct the felling operations to prevent careless or unnecessary breakage of timber. All trees designated for cutting shall be felled within the timber harvesting plan boundaries to the fullest extent practicable, considering locations of watercourses, felling damage, yarding method, and damage to leave trees. No trees shall be felled across the State Forest property line. When topography, lean of tree, regeneration and residual timber, location of roads, landings, watercourses, utility lines and buildings permit, all trees shall be felled in line with skidding direction. Gulch bottoms and other areas of heavy stands of timber as designated by the Timber Sale Officer shall be felled and logged in two or more stages in order to minimize blocked layouts and breakage.

   Cable tree-pulling methods shall be used where needed to prevent unnecessary breakage to all trees having volumes in excess of 1,500 board feet, to prevent felling of trees into or across watercourses, or to control felling direction near utility lines, public roads and property lines. Where poor volume recovery is expected because of anticipated breakage, the Sale Officer may specify that individual trees otherwise designated for cutting shall be left standing.

   All fallers shall be equipped with falling wedges at all times. Fallers working in the Watercourse and Lake Protection Zones shall have ready access to and be knowledgeable in the use of tree-falling jacks and shall use them as necessary to direct the fall of trees away from watercourses.

e. Timber wasted in tops, timber wasted by careless or improper bucking, timber broken in careless felling, and any timber merchantable according to the terms of this Agreement which is cut and not removed from any portion of the cutting area when operations on such portions are completed, or before this Agreement expires or is otherwise terminated, unless such wastage or nonremoval involves small amounts, and in the judgment of the Timber Sale Officer, is justified by existing conditions, shall be paid for at double the stumpage price in this Agreement. The amounts herein specified shall be regarded as liquidated damages as it will be impractical or extremely difficult to fix the actual damage.

   Unless extension of time is granted by the Director of Forestry and Fire Protection, the right, title and interest to any timber for which payment has been made under the provisions of this section shall revert to the STATE without compensation unless it shall have been removed from any portion of the sale area accepted by the Sale Officer by the

date of that acceptance as designated in accordance with provisions hereunder.

f. Cull logs or conifer species not merchantable as defined in the Agreement, removed in separate truck loads from the sale area at the request of the PURCHASER and with the prior written approval of the STATE, shall be paid for by the PURCHASER at the rate of $5.00 per ton, or at $25.00 per thousand board feet gross scale, if scaled.

g. When approved in writing by the STATE, hardwood trees felled, knocked down or damaged by logging operations may be removed by the PURCHASER under conditions prescribed by the STATE. Hardwoods removed from the sale area shall be paid for at the rate of $0.20 per ton.

PRIOR APPROVAL FOR CONDUCTING BUSINESS ON WEEKENDS/HOLIDAYS

9. The PURCHASER shall notify and obtain approval from the STATE in advance on each occasion of conducting timber operations in the sale area on weekends or State holidays.

TMBER HARVEST PLAN (1-09-110MEN), Items 10a-10p

10. The Forest Practice Rules for the Coast Forest District, and the Timber Harvesting Plan for this timber sale (THP number 1-09-110 MEN), are hereby made a part of this Agreement, and the PURCHASER agrees to comply with each and all of the terms thereof in the same manner as if said Timber Harvesting Plan and Rules and each thereof were set forth at length in this Agreement. Rules or regulations which become effective during the term of this agreement, and any amendments to the Timber Harvesting Plan, shall be adhered to by the PURCHASER to the extent required by law.

Operating conditions and specifications shall be modified as required to comply with changes in the legal status of, or in the laws pertaining to protection measures for, any species under the federal Endangered Species Act. Such modifications shall be agreed upon mutually by the STATE and the PURCHASER.

Timber operations required under this Agreement shall be conducted by a Licensed Timber Operator. On completion of timber operations satisfactory to the Timber Sale Officer on that portion of the Timber Harvesting Plan area for which each Operator is responsible, the Operator shall certify by letter to the STATE that all operations are complete and that they comply with the Forest Practice Rules and the Timber Harvesting Plan. The STATE may prepare annual partial completion reports when it is in the STATE's interest to do so.

Forest Practices and operational procedures in addition to those set forth in the said Rules and Timber Harvesting Plan shall be required as follows:

a. A pre-work conference to be attended by representatives of the STATE, the PURCHASER, and all timber operations subcontractors is required before any timber harvesting activities may begin. A detailed logging plan for the sale area shall be prepared and submitted by the PURCHASER to the Timber Sale Officer for approval at least two working days prior to the pre-work conference. The logging plan shall include the locations of any proposed new landings and roads not anticipated in the Timber Harvesting Plan; a schedule of road construction, felling, logging, cleanup, and other operations within the sale area; and the number, types and special requirements of the equipment to be used in the sale area.

   Also required are pre-work conferences for any other projects associated with this Agreement, with attendance by representatives of the STATE, the PURCHASER, and all project subcontractors. The PURCHASER is responsible for ensuring that all contractors are provided with relevant portions of any applicable documents, including the Timber Harvesting Plan, the Timber Sale Agreement, and permits from other agencies.

   The PURCHASER shall notify the Timber Sale Officer of any changes in the numbers or types of logging equipment or personnel assigned to the sale area that may affect productivity.

b. All logging operations shall be by natural logging areas and in an efficient, orderly, and progressive manner. The STATE may designate the sequence in which the units are to be logged.

   No timber operations shall be conducted after February 1 of any year until the STATE or the PURCHASER has completed required surveys for northern spotted owls, and extension of the No-Take Certification has been received from the appropriate wildlife agency. Presence of owls in or near the sale area may impact the conduct or timing of harvesting operations.

   Timber operations shall comply with the wet weather operating restrictions described in the Timber Harvesting Plan.

c. In the sale area not designated for skyline yarding, any method of yarding other than by means of crawler tractor or rubber-tired skidder shall be employed only with the advance approval of the Timber Sale Officer, and under such conditions and restrictions as may be required. Equipment used for skidding logs shall be equipped with winches and fair-leads. Grapple skidding equipment may be used only with the advance approval of the Sale Officer.

   The locations of all existing skid trails to be reused and new skid trails to be constructed shall be flagged by the Timber

Operator at least two weeks prior to their intended use, failure to do so by the LTO may result in unnecessary delay in harvesting. Timber Sale Officer will be notified when an area has been flagged for skid trails and landings and location approval by the Sale Officer is required prior to use. If timber felling substantially obliterates skid trail flagging, the Timber Operator shall reflag the locations of approved skid trails prior to their construction or reuse. Heavy equipment shall not be operated within cable areas, equipment exclusion zones, or equipment limitation zones unless their use is in compliance with the Timber Harvesting Plan and approved by the Sale Officer.

d. The width of tractors or other equipment used for skidding purposes shall not exceed 10 feet 6 inches without written permission of the Sale Officer. Rubber-tired equipment shall not be operated off of approved skid trails and truck roads. Tracked equipment shall not be operated off of approved skid trails or roads unless specifically authorized in each case by the Sale Officer.

e. Minimum distance permitted between new skid trails will be 100 feet measured along the surface of the ground unless specifically waived in each case by the Sale Officer.

At all times of the year, erosion control structures shall be installed on all skid trails and temporary or seasonal truck roads within 30 days of completion of their use, or at the end of the day if the U. S. Weather Service forecast is a "chance" (30 percent probability or more) of rain before the next working day, or at any time that the equipment needed to install such structures leaves the sale area.

The Timber Sale Officer may suspend timber operations in whole or in part when environmental damage may result from the operation of equipment in logging or hauling the timber included in this Agreement. Operations shall not resume until approval is given by the Sale Officer.

f. No unnecessary damage shall be done to regeneration, hardwoods, and leave trees. To the greatest extent feasible, leave trees greater than 12 inches DBH shall not have bark torn back from the bole of the tree by log skidding equipment, whether by ground-based or skyline yarding equipment. Leave trees severely damaged in logging, as described in the Timber Harvesting Plan, shall be cut and paid for, if so required by the Timber Sale Officer. Trees specifically marked for leave, and all unmarked trees in watercourse and lake protection zones, shall be protected to the fullest extent possible.

g. Each merchantable tree that is felled shall be bucked to log lengths, limbed to the 6-inch top, and the top bucked at the time of felling. This requirement shall apply to marked trees

and also to any unmarked trees felled for safety reasons, in clearing for road or landing construction, as directed by the Timber Sale Officer for cutting of damaged trees, or as otherwise necessary for the conduct of harvesting operations.

All slash created by timber operations within 0-50 feet of seasonal roads 313, 315 and 315A, shall be lopped to the extent that no portion shall remain over 12 inches, and between 51 to 100 feet no portion remaining over 30 inches, above the ground. Slash created within 100 feet of seasonal road 310 shall be lopped to the extent that no portion shall remain over 12 inches above the ground. Slash within 100 feet of all other seasonal roads, including spur roads of the numbered roads stated above, shall be lopped to the extent that no portion of slash remain over 30 inches above the ground. Prior to October 15 of each operating season, and concurrent with lopping activities conducted after that date, slash and other logging debris shall be removed from truck road surfaces, cut banks, ditches and berms, and from the inlets and outlets of culverts, unless otherwise directed by the Timber Sale Officer.

h. To reduce fire hazards, concentrations of slash and logging debris created by the logging operations around landings or located within the sale area shall be spread along skid trails and spur roads and packed by dozer track to reduce erosion. All remaining slash and logging debris shall be piled and isolated for burning as specified by the Timber Sale Officer. For numbered seasonal roads, slash and logging debris shall only be piled and isolated for burning as specified by the Timber Sale Officer; or, where designated, landing slash shall be placed to block skid trails where they lead onto truck roads or landings. Waste piles shall be kept substantially free of soil. On slopes greater than 20% where piles are to be burned, they shall be isolated by building a 10-foot wide fire line to mineral soil using hand tools. On slopes of 20% or less a dozer may be used to build the fire line. Fire lines shall be waterbarred at the time of construction.

Where slash is piled for burning, the PURCHASER shall provide a sufficient quantity of 80 lb water resistant kraft paper and shall cover a minimum 10-foot by 20-foot section near the center of each pile, weighting the paper adequately to hold it in place during windy weather.

In order to utilize wood residues and reduce fire hazards, logging wastes on landings on permanent and seasonal roads shall be segregated into large materials which can be utilized by firewood cutters, and other wastes such as bark, branches, etc. For the purposes of this section, material at least 8 inches in diameter and 6 feet in length shall be considered suitable for firewood. On completion of use of each landing,

firewood material shall be placed in a stable position where it can be reasonably utilized by firewood cutters.

i. Section corners, quarter section corners, meander posts and bench marks shall not be destroyed, defaced or removed to another place, nor shall any witness trees be cut or scarred. Should corners, meander posts or bench marks be accidentally destroyed, the PURCHASER shall be responsible for their replacement by a licensed land surveyor, and all notes, plates or records shall be delivered to the STATE for its approval and files.

j. Timber to be harvested in the area designated for cable logging on the attached timber sale map (Exhibit A) shall be yarded using a standing, live or running skyline system which meets the following requirements:

(1) Holds the skyline carriage stationary until logs are yarded laterally to the skyline corridor.

(2) Can yard laterally a distance of at least 100 feet perpendicular to the skyline corridor.

(3) Supports logs clear of the ground as the carriage moves along the skyline when logs are above Class I or II watercourses and, to the greatest extent feasible, within Class I or II Watercourse Lake Protection Zones to avoid unnecessary damage to riparian soil and vegetation. In other locations, logs shall be yarded with at least one end suspended, provided logs follow directly behind the skyline carriage.

(4) Is capable of yarding for a slope distance of approximately 1,800 feet from the landing, and which can reach a slope distance of approximately 2,200 feet to the tailhold.

(5) Can be used to pull trees against their lean.

The practice of tight-lining to move yarder lines to their next position shall not be used.

The locations of all cable corridors shall be flagged by the Timber Operator for approval by the Timber Sale Officer prior to rigging. The distance between corridors shall not be less than 200 feet at the back of the cable road without approval of the Sale Officer. Except in the Watercourse and Lake Protection Zone, unmarked trees within approved yarder cable corridors may be felled before rigging and yarding, but not to exceed a pre-cut corridor width of 10 feet as determined by the centerline of the entire corridor from the yarder location to the tailhold, or wider if approved in advance in each case by the Sale Officer. Within the Watercourse and Lake

Protection Zone, only those trees which directly interfere with the movement and safe operation of yarding cables may be cut. The Sale Officer may specify that such corridor trees felled within the WLPZ be left on the ground. Trees leaning into or over the corridor may be felled only if they jeopardize the safety of the operation. Unmarked trees removed from the yarder cable corridors shall be logged and paid for at the same rate as marked timber. Trees pulled over during cable logging operations shall be bucked to log lengths, with the roots and top removed, before yarding.

All rigging shall be slung on stumps as far as practical. With the advance approval of the Sale Officer, leave trees may be used as spar trees or felled to provide suitable stumps for rigging purposes, provided that the merchantable timber in such trees shall be paid for by the PURCHASER in full at the rate set forth in Section 1. Spar trees shall be felled following their use as spar trees except where not required by the Sale Officer. With advance approval, the PURCHASER may utilize fabric straps on standing trees in lieu of cable straps for tail hold, guy anchor, or spar tree rigging, where such use of standing trees is in compliance with applicable safety regulations.

The PURCHASER may be required to rig tail trees or lift trees to overcome difficult deflection situations.

Any use of tractors in the area designated for skyline yarding shall have prior written approval of the Sale Officer, and must be provided for in the Timber Harvesting Plan. Throughout the sale area, red and white striped flagging marks the limit beyond which heavy equipment may not travel without approval. These limits are shown on the attached maps (Exhibit A) and when mapped next to a road or landing the limits which heavy equipment may not travel is the road or landing.

k. The PURCHASER and PURCHASER's agents may post temporary signs in order to display on-site messages (e.g. haul route mile posts, CB channel, etc.). Signs shall be removed once their function is completed, and in all cases before the term of this Agreement. No messages are to be painted on any tree, rock, stump, or other permanent feature.

l. Any flagging used by the PURCHASER in the sale area shall correspond to the table of flagging colors in the Timber Harvesting Plan, or shall otherwise be approved by the Timber Sale Officer.

m. At any time that cable lines cross any Forest road, including roads within the sale area, the PURCHASER shall place warning signs to notify traffic of the location of the lines, and shall block the road or shall have a person stationed on the road to control traffic when lines are being raised or

lowered, or when cable road changes are being made. As directed by the Timber Sale Officer, when such roads might be used by other than the PURCHASER or the Sale Officer, the PURCHASER shall either block the road from both sides or provide a flag-person for traffic control.

n. The PURCHASER's Licensed Timber Operator shall be responsible for maintenance of erosion controls on all skid trails and truck roads used by that Operator until the work completion report for the Timber Harvesting Plan has been approved by the Director of the Department of Forestry and Fire Protection.

o. As called for by the Timber Harvesting Plan the PURCHASER shall provide and apply seed and/or straw or slash mulch for erosion control purposes. In addition, bare soil associated with equipment disturbance within WLPZs and ELZs that exceed 100 square feet are to be mulched to achieve at least 95% coverage to a minimum depth of four inches.

p. The PURCHASER shall provide and use trash cans for papers, cans, oil filters and other debris. Broken chokers, wire rope and other debris shall be removed and all trash shall be disposed of at a public disposal facility.

Within 100 feet of any truck road or log landing, human waste shall be buried immediately at a depth of at least 12 inches. Human waste shall not be deposited within any Watercourse and Lake Protection Zone or any Class III Watercourse Equipment Limitation Zone.

HARVEST ONLY DESIGNATED TREES

11. The PURCHASER shall cut all and only those trees designated for cutting. No timber shall be removed from the State Forest until scaled or released by the Timber Sale Officer.

Merchantable timber designated for cutting by the Sale Officer for the construction of landings, bridges, or roads, or for the reconstruction, rehabilitation, or improvement thereof, or for development of rock quarries, within the sale area or for access thereto, shall be paid for at the rate set forth in Section 1 of this Agreement.

LIABILITY/DAMAGES PAYMENT RATE

12. It is agreed that because of the effect upon the State Forest land as a whole and upon its future productivity and because of the nature of the case, it will be extremely difficult and impractical to fix the actual injury to the STATE by the following type of breaches of this Agreement by the PURCHASER:

a. The failure to remove all merchantable material designated for cutting as agreed herein; and

b. The loss of merchantable timber from fire, or from other injury caused by the PURCHASER or which the PURCHASER might have prevented and by the terms of this Agreement the PURCHASER is required to prevent; and

c. The cutting or severely damaging by logging of leave trees as agreed herein.

And it is further agreed that by reason of such extreme difficulty and impracticability the PURCHASER shall pay to the STATE for such merchantable material the PURCHASER so fails to remove, and for merchantable material so lost or damaged, at double the rate hereinbefore set forth, provided that such payments shall not release the PURCHASER from liability for any damage suffered by the STATE in addition to the value of said trees so not removed or lost or cut or damaged as aforesaid shall be regarded as liquidated damages. In cases of occasional injury as described above and involving small amounts of material only, the Timber Sale Officer will use discretion and judgment in determining whether any breach of contract has occurred within the meaning of this paragraph.

PROTECTION OF STATE FOREST INFRASTRUCTURE

13. All telephone lines, ditches, pipelines, water developments, power lines, and fences; and all structures, and improvements located within or immediately outside the exterior boundaries of the sale area, shall be protected so far as possible in logging operations, and if damaged, shall be repaired immediately by the PURCHASER at PURCHASER's expense; and the Timber Sale Officer may, when it is necessary, require the PURCHASER to move or cause to have moved, any such lines or fence from one location to another.

Roads shall at all times be kept free of logs, slash and debris resulting from the PURCHASER'S operations hereunder. Any road used by the PURCHASER in connection with this sale that is damaged through such use shall promptly be restored by the PURCHASER to its original or better condition at the PURCHASER's expense.

FOREST ROADS, Items 14a-14n

14. Logging roads, skid trails, bridges, watercourse crossings, and landings shall be constructed in a manner consistent with the goals of good forest management. Operations in or near sensitive or critical areas will be reviewed and approved by the Timber Sale Officer. The Sale Officer will use whatever means are necessary to insure that operations conform to the approved specifications.

a. Roads and landings to be constructed or reconstructed by the PURCHASER shall be built and maintained in accordance with applicable Forest Practice rules. Except where more specific instructions are given elsewhere in this Agreement or in the

Timber Harvesting Plan, roads and landings shall be constructed to the following specifications:

(1) Cut and Fill Slopes: Normal fill slopes will be 1½:1 minimum; normal cut slopes will be ½:1, or as determined on a site specific basis by the Timber Sale Officer. In solid rock, and in construction of temporary roads, cut slopes may be steeper. In localized unstable soils, slopes shall be flattened as determined by the Sale Officer, but not to exceed 2:1.

(2) Compaction: Structural fill shall be compacted by dozer track in lifts not to exceed eight (8) inches in depth, or by compactor in lifts not to exceed twelve (12) inches in depth. Compaction shall be equal to or greater than the natural state of the soil or a minimum of seventy (70) percent relative degree of compaction. Woody material shall not be deposited in fills.

(3) Width: The standard roadbed width for straight road sections shall be 14 feet, including a one-foot shoulder on each side of a 12-foot traveled surface, with additional width on curves as needed to allow passage of log trucks. Roadbed width is measured from the base of the cut slope to the top of the fill slope. The maximum width allowed on minimum-radius switchbacks is 20 feet. Excavation shall be limited to that necessary to construct the minimum road width. New roads constructed wider than these standards shall be narrowed by pulling back excess fill or sidecast and placing it at locations designated by the Timber Sale Officer. Normal spacing for turnouts is 1,000 feet.

(4) Radius of Curvature: 50 feet minimum.

(5) Construction Method: Excess material shall not be sidecast onto slopes greater than 65%. On side slopes exceeding 50%, new roads shall be full bench construction, keeping sidecast to less than three feet in thickness by drifting excess excavated material along the road surface or utilizing it as fill elsewhere. Length of through-cut sections shall be minimized, and shall in no case be longer than the standard waterbar spacing unless provision is made for disposal of road surface water.

(6) Surface Drainage: Unless otherwise specified, roads shall be constructed and maintained with a 2-5% outslope and without a berm or inside ditch. The road surface shall be insloped or bermed only where needed to direct water to a drainage facility or away from a sensitive area. Where grade is 7% or less, permanent and seasonal roads shall have rolling dips incorporated into their running surface during their construction at locations

proposed by the PURCHASER and approved by the Timber Sale Officer. Where grade of permanent or seasonal roads is more than 7%, waterbreaks or other suitable forms of water dispersal, shall be installed by bulldozer at locations specified or approved by the Sale Officer upon completion of use of the road for log hauling, but prior to final road grading. Spacing between rolling dips shall be consistent with the waterbreak spacing requirements of the Forest Practice Rules and the Timber Harvesting Plan. Rolling dips shall be constructed in accordance with the attached diagram, Exhibit F.

(7) Landings: The locations and extent of all new landings shall be approved in advance by the Sale Officer.

b. Where the Timber Sale Officer has set construction stakes or marked trees or placed flagging to establish road centerlines and grades or cut and fill markers for road work, culverts, erosion control or other necessary structures, these markers shall constitute the field control by and in accordance with which the PURCHASER shall govern and execute the road or other work as portrayed on such road plans, profiles, or specifications furnished the PURCHASER.

c. Prior to excavation for new road or landing construction, trees and other live woody vegetation greater than two inches dbh within the designated right-of-way shall be felled. Any tree boles or portions thereof six inches in diameter and eight feet in length, or larger, whether merchantable or not, shall be limbed, cut to lengths not exceeding the maximum log length allowed in this Agreement, and removed to landings or to other disposal sites approved by the Timber Sale Officer. Remaining limbs, tops, slash and other woody debris shall not be mixed with or buried by excavated material, but may be windrowed below the toe of the fill or sidecast slope.

All new road construction shall be done by using a hydraulic excavator, or by using a bulldozer equipped with a square or semi-U blade. Provisions elsewhere in this Agreement may further specify the equipment to be used. No material or debris removed from the right-of-way shall be deposited in watercourses or drainage channels. After the road bed has been substantially completed, it shall be given appropriate surface drainage as specified in Paragraph 14.a(6) above, or as otherwise directed by the Sale Officer. Prior to its use as a log truck access road it shall be shaped and dressed with a grader in conformance with all finish lines, grades and typical cross sections or specifications furnished by the STATE. Side slopes shall be finished in a neat manner with no undercuts or overhanging edges.

d. The PURCHASER shall furnish new corrugated metal or polyethylene pipe culvert, metal downspout, and metal stakes

in accordance with the attached culvert materials list (Exhibit C). The PURCHASER shall provide any additional materials needed to perform the work required below. The PURCHASER shall install culverts and downspouts and do other associated work in locations designated by, and to the specifications of, the Timber Sale Officer and as shown on the attached road work list (Exhibit D), Timber Sale Maps (Exhibits A and B) and culvert installation specifications (Exhibit E). Any additional culvert or drainage facility material needed for unanticipated road drainage structure installations or to lengthen or enlarge designated installations will be provided by the STATE and shall be installed by the PURCHASER. Any culvert, culvert couplers, or downspout listed in Exhibit C which is required to be provided by the PURCHASER and which is surplus following completion of all specified work shall be retained by the STATE and shall be delivered by the PURCHASER to the STATE’s yard adjacent to the Parlin Fork Conservation Camp within 30 days of completion of log removal from the sale area.

All required culvert installations on existing roads shall be completed prior to log hauling on those roads, and not later than October 15 of the first year of operations in the sale area. Culvert and downspout installations on roads to be constructed shall be concurrent with road construction and prior to their use for hauling timber.

The culvert shall be laid to lines and grades approved by the Timber Sale Officer. Where culverts are being placed in live streams, the flowing water shall be impounded and diverted around the work site, and any other provisions of the Timber Harvesting Plan or Stream Alteration Permit shall be adhered to. Culverts installed as watercourse crossings shall be placed at the grade of the natural stream channel such that downspouting is not needed, unless specified otherwise. Trench width shall be sufficient to accommodate compacting equipment on each side of the culvert. Bedding and backfill material shall be well graded, and shall be substantially free of woody material and large rocks. The culvert bed shall be smoothed to grade and bedding material shall be shaped and packed to provide firm support for the full culvert length. Haunches shall be well compacted, and all backfill shall be compacted in six-inch lifts, using a powered mechanical compacting device.

For installations done at any time that backfill material is too dry for good compaction, backfill shall be watered during placement and compaction to increase its moisture content to an appropriate level for the type of soil.

Where trenches are excavated in existing permanent or seasonal roads for culvert or other work, the disturbed portion of the road surface shall be restored by surfacing with a minimum

six-inch compacted layer of 1″-3″ coarse crushed rock provided by the PURCHASER. The amount of rock needed for each installation is noted on the Work List (Exhibit D). Backfill and rock shall be mounded over the disturbed portion of the road to allow for settling of fill, and a berm shall be constructed as necessary to protect the fill slope from erosion caused by road runoff.

Unless otherwise approved by the Sale Officer, culvert outlets shall be cut back and downspouts installed so that the downspouts are in contact with the ground throughout their entire length. Downspouts shall be secured by wrapping with wire to metal fence pickets driven solidly into the ground. Energy dissipaters made up of suitable native material shall be placed at the outlets of culverts and downspouts, and at culvert inlets as directed by the Sale Officer. Trench construction, pipe bearing surfaces, and back-filling shall be approved by the Timber Sale Officer. The Sale Officer shall be given at least two business days notice of the date(s) of culvert installations.

The PURCHASER shall install a metal fence picket culvert marker at the head of each installed culvert in accordance with the instructions of the Sale Officer.

All inlets and outlets of existing and installed culverts on any roads used or constructed by the PURCHASER shall be kept open to their full capacity at all times. The PURCHASER shall replace or repair any culverts, downspouts, or culvert location stakes lost, damaged, or destroyed by the PURCHASER's operations. All old culvert and debris resulting from culvert replacement shall be crushed and disposed of by the PURCHASER at a public disposal site.

e. The PURCHASER shall protect existing watercourse crossing structures on State Forest land from any damage that might be caused by PURCHASER's equipment and/or loads in the performance of this Agreement. Any bridge or culvert used by the PURCHASER on State Forest land in connection with this sale that is damaged or injured through such use shall promptly be restored by the PURCHASER to its original condition at the PURCHASER's expense. STATE bridges and culverts are designed for highway loads unless load signs are posted.

f. All Forest roads and landings which are used by the PURCHASER for decking, loading or hauling logs or for other operations conducted under this Agreement, including roads used by timber fallers or rigging crew, and roads used for hauling rock or water for use on the sale area, shall be maintained by the PURCHASER in serviceable condition during and immediately following periods of use at the PURCHASER's expense.

Road or landing use shall be discontinued if firm, stable road and landing surfaces acceptable to the Timber Sale Officer cannot be maintained, or if trucks cannot operate under their own power, and the PURCHASER shall take measures necessary to improve the condition of the road or landing. These measures may include stabilizing the road or landing surface with rock and geotextile fabric, or postponing further use of the road or landing until a period of drying allows the surface to become firm and stable. Saturated loose material and fines that accumulate on the road or landing surface shall not be bladed off to permit hauling without specific approval from the Sale Officer in each case. Such material must be bladed back onto the road or landing after it has dried. Additional wet weather road use restrictions appear in Item 18 of the Timber Harvesting Plan.

Truck roads shall be treated for dust control in one or a combination of the following ways:

(1) Truck roads will be watered daily and graded as necessary to maintain a good road surface as designated by the Timber Sale Officer. Watering shall be done in the evening or early morning so that water penetrates the road surface before hauling begins, and shall be repeated during the day if necessary to maintain a stable road surface.

(2) Truck roads may be treated using lignin or other surfacing chemicals approved by the Timber Sale Officer. Treatment must be in accordance with manufacturer's specifications and reapplied as necessary to maintain a dust-free environment. Any ruts or chuck holes that develop on said roads after surfacing shall be immediately removed by grading or patching. If the PURCHASER is unable to maintain a good road surface by this method, the Sale Officer by written notice may require the PURCHASER to maintain the roads in accordance with paragraph 14.f.(1) of this Agreement.

    If lignin is used, it shall be diluted with water to a 10% solution prior to application and shall be applied according to manufacturer's recommendations at the rate of 0.25 gallon per square yard to the full width of the road. It will likely take several passes during each scheduled application to achieve the final application rate.

Each application shall be completed within two weeks of being called for by the Sale Officer.

Maintenance work shall also be done within 15 days of the end of hauling operations on each road (each season), and immediately on completion of hauling on any road after October

15. Maintenance shall include outsloping or installation or improvement of waterbars, rolling dips, or other road surface drainage facilities as specified by the Sale Officer; final watering and grading to remove ruts and other irregularities that would prevent adequate drainage of the road surface; removal or breaching of berms; and a final clearing of drainage ditches and culvert inlets and outlets as necessary to insure proper functioning of the road drainage system.

Where more than one timber sale must use the same road at the same time, the PURCHASER of the sale with the largest estimated timber volume to be removed over that road during the current operating season, as determined by the STATE prior to the start of timber operations, shall have the primary responsibility for routine maintenance (watering and grading) of those roads being used simultaneously, and shall also be responsible for any additional unanticipated work needed to maintain a firm, stable road surface or to provide proper road drainage. The last user of each road each year shall be responsible for the final road maintenance required at the end of the operating season, as described in the paragraph above. Joint road users are encouraged to share routine road maintenance burdens equitably on a basis proportional to actual use. When only one party is using a road then that party is solely responsible for all road maintenance requirements.

g. The PURCHASER shall construct and maintain approximately 3.7 miles of new seasonal truck road and 0.25 miles of new temporary truck road as indicated on the attached map (Exhibit A) to conform to provisions in the Timber Harvesting Plan and to road specifications set forth in paragraphs 14.a through 14.f of this Agreement.

New road shall be constructed by an excavator and built as full bench, as described in the Timber Harvesting Plan. Excavated material shall be hauled to spoil sites at locations designated by the Timber Sale Officer. Spoil sites shall be prepared by removal of vegetation and slash, which shall be placed in a location suitable for burning. End-hauled spoils shall be graded to blend with the topography, compacted by dozer or compactor in lifts, and mulched to a depth of two inches with straw provided by the PURCHASER.

h. The PURCHASER shall, to the satisfaction of the Timber Sale Officer, provide and install two (2) iron pipe gates on road 313 and 315 where they leave Road 310 as shown on the accompanying map (Exhibit A), and in accordance with the attached gate plan and specifications (Exhibit G). All gate installations shall be completed by the date that road construction has been completed for the road where the gate is required, or by October 15, whichever is sooner.

i. The PURCHASER shall comply with a Department of Fish and Game Stream Alteration Permit obtained by the STATE.

j. The PURCHASER shall provide locks and double locking plates or pins, as needed, for each gate used by the PURCHASER or by the PURCHASER's contractors for access to the sale area or other work area, and shall immediately replace locks and plates or pins that may be lost during operations. Locks provided by the PURCHASER may be keyed or combination if needed for use by the PURCHASER or contractors; the STATE will provide locks for use by STATE personnel. The STATE shall be given keys or the combination for each of the PURCHASER's locks to ensure that the STATE always has access through the gates.

k. Timber hauled from the sale area shall access the public highway system via Road 310 to Highway 20.

l. The STATE may, from time to time, schedule organized public events which require weekend or holiday use of roads used by the PURCHASER within or appurtenant to the sale area. With a minimum of two weeks notice from the STATE, the PURCHASER shall make specified roads available for such use by removing down timber and slash from the road surface, positioning equipment off of the road, and otherwise making the road passable for the designated use.

HEALTH AND SAFETY LAW, TEMPORARY STRUCTURES

15. No permanent structures shall be allowed on State Forest land. Temporary structures shall be kept to a minimum necessary for the logging operation and shall be maintained at PURCHASER'S expense. They shall be located, built to standards, and operated as may be required by the Timber Sale Officer to prevent the pollution of the water in any watercourse. Outhouses and toilets shall be constructed and maintained so as to prevent, so far as possible, the breeding of flies or the development of unsanitary conditions. The PURCHASER shall abide by all Health and Safety Laws of the State. All structures shall be removed when cutting is completed or the sale terminated, and the grounds cleaned up to the satisfaction of the Sale Officer.

FOREST FIRE SUPPRESSION

16. During the time that this Agreement remains in force, the PURCHASER shall independently of STATE effort do all that can be done to prevent and suppress forest fires on the sale area and shall require all employees, agents, contractors, subcontractors, and employees of contractors and subcontractors to do likewise.

Unless prevented by uncontrollable circumstances, the PURCHASER shall place all employees, agents, contractors, subcontractors, and employees of contractors and subcontractors, and their equipment at the disposal of any authorized representative of the Director of Forestry and Fire Protection for the purpose of fighting forest fires on or

adjacent to the State Forest, with the understanding that where fire fighting services are not rendered on the sale area of the PURCHASER, payment to the PURCHASER, and to employees, agents, contractors, subcontractors, or employees of contractors and subcontractors of the PURCHASER by the STATE for such services shall be made at standard rates established by the Director of Forestry and Fire Protection where such services are specifically ordered or requested by the Department of Forestry and Fire Protection Officer in charge of the fire; provided further, however, that no payment shall be made by the STATE to the PURCHASER if said fire occurred or spread as the result of violation of law, Forest Practice Rules, or actionable negligence attributable to the PURCHASER, or to employees, agents, contractors, subcontractors, or employees of contractors and subcontractors of the PURCHASER.

In cases where fires occur upon the sale area or spread across the sale area from an adjacent area, the PURCHASER will bear all expenses incurred in action taken upon the fire prior to the arrival of the Department Officer in charge of the fire. Upon arrival of the Department Officer in charge of the fire the PURCHASER, and employees, agents, contractors, subcontractors, or employees of contractors and subcontractors of the PURCHASER, may be reimbursed by the STATE for fire fighting services rendered by them in response to specific orders and requests made by the Department Officer in charge of the fire at the rates provided for in the second paragraph of this section; provided further, however, that when the fire has been surrounded by control lines, the PURCHASER will assume all costs of patrol until the fire is declared to be out by the State Forest Ranger in charge of the fire protection in the area and provided further, that in the event said fire has occurred or spread as a result of violation of law, Forest Practice Rules, or actionable negligence of the PURCHASER, or employees, agents, contractors, subcontractors, or employees of contractors and subcontractors of the PURCHASER, then the PURCHASER shall not be reimbursed in any amount by the STATE for services rendered by PURCHASER, or by employees, agents, contractors, subcontractors, or employees of contractors and subcontractors of the PURCHASER, in control of the fire.

When the STATE becomes legally obligated by contract expressed, implied or otherwise, to make payment for any fire fighting services under the second and third paragraphs of this section and the said fire occurred or spread as the result of violation of law, Forest Practice Rules, or negligence attributable to the PURCHASER, or to employees, agents, contractors, subcontractors, or employees of contractors and subcontractors of the PURCHASER, said PURCHASER shall reimburse the STATE for that payment.

The provisions of this section shall not be construed as relieving the PURCHASER of fire suppression costs for which the PURCHASER is otherwise liable under State law.

WATER WAGON

17. In addition to the required complement of fire tools, during the period specified by law, the PURCHASER shall have readily available to the sale area for fire suppression purposes a "water wagon" or similar self-propelled vehicle of at least 1,000 gallons capacity which shall be maintained in good operating condition. This unit shall be kept filled to capacity except when in actual physical use on the logging operation and equipped with at least 150 feet of serviceable 1½ inch fire hose with National Standard thread fittings and a serviceable nozzle for said hose; and further, said unit shall be equipped to draft water from a stream or pond as well as to pump water from the tank mounted on the vehicle.

PURCHASER’S REPRESENTATIVE AVAILABILITY

18. All timber included in this Agreement shall remain the property of the STATE until paid for in full by the PURCHASER in the manner hereinbefore set forth, provided that the risk of loss thereof, by fire or otherwise, after operations have begun with reference to the particular logging area, shall be on the PURCHASER.

PURCHASER’S REPRESENTATIVE AVAILABILITY

19. At all times when construction or logging operations are in progress, the PURCHASER shall have a representative readily available to the area of such operations, who shall be authorized to receive, on behalf of the PURCHASER, any notices and instructions given by the STATE in regard to performance under this Agreement, and to take such action thereon as is required by the terms of this Agreement.

INDEMNITY CLAUSE

20. The PURCHASER agrees to indemnify and save harmless the STATE, its officers, agents, and employees, from any and all claims and losses accruing or resulting to persons engaged in or about the performance of this Agreement, or to third persons who may be injured or damaged by the PURCHASER or PURCHASER's agents, in the performance of this Agreement except negligent acts of the STATE. The PURCHASER shall provide necessary Workers' Compensation Insurance at the PURCHASER'S own cost and expense.

COMPLY WITH ALL REGULATIONS/LAWS

21. The PURCHASER, in all activities under or pursuant to this Agreement, as well as in handling, reselling or otherwise dealing with respect to the timber and other material realized by the PURCHASER by reason of this Agreement, whether such timber and other material is in its original form or in a changed form, agrees to comply in all respects with all lawful acts, rules, regulations and directions of any legislative, executive, administrative or judicial body or officer exercising any power of regulation or supervision with respect to such matters and whether arising out of the provisions of this Agreement or otherwise.

The PURCHASER shall comply with all applicable State Safety Orders, Title 8, California Code of Regulations.

22. No provision of this Agreement shall authorize the PURCHASER or PURCHASER's agents or servants to act as an officer, agent, or employee of the STATE.

23. This Agreement is entered into by the STATE in reliance upon the knowledge and skill of the PURCHASER, and is not assignable by the PURCHASER either in whole or in part except on prior written consent by the STATE.

24. Time is the essence of each and all of the provisions of this Agreement.

25. If the PURCHASER breaches any of the provisions of this Agreement, the STATE may serve written notice of such breach upon the PURCHASER, and thereupon the STATE may suspend the operations of the PURCHASER hereunder until such time as such breach is remedied, and if such breach is not remedied within ten days, the STATE may, at its option, without further notice, terminate this Agreement.

26. As further guarantee of a faithful performance of the conditions of this Agreement, the PURCHASER delivers herewith a faithful performance bond, or approved alternate form of security, satisfactory to the STATE in the sum of ninety-five thousand ($95,000). Upon satisfactory completion of all timber harvesting activities, the PURCHASER may request a one-time reduction of this security to an amount determined by the STATE to be sufficient to cover all remaining provisions of this Agreement.

Alternate forms of security in lieu of a performance bond are:

a. Certificate of deposit with the California Department of Forestry and Fire Protection as payee, issued by a bank or similar financial institution which is a member of the Federal Reserve System or is insured by the Federal Deposit Insurance Corporation.

b. Irrevocable letter of credit issued by a bank or financial institution which is a member of the Federal Reserve System or is insured by the Federal Deposit Insurance Corporation.

All bonds, letters of credit, or certificates of deposit, must be in a form acceptable to the STATE.

The PURCHASER agrees that all monies deposited and the faithful performance bond, or security, delivered under this Agreement may, upon failure on the PURCHASER's part to fulfill all and singular the requirements herein set forth or made a part hereof, may be retained by the STATE to be applied as far as may be to the satisfaction of the PURCHASER's obligations assumed hereunder, without prejudice whatever to any other rights and remedies of the STATE. As soon as the STATE determines that security for the performance of the terms of this

Agreement or provisions for the settlement of claims or for damages incident thereto is no longer necessary to be retained or made, any balance of the initial deposit that may be left after applying it to any payment due or owing will be returned to the PURCHASER.

The PURCHASER shall be solely responsible for filing reports with the State Board of Equalization and payment of the timber yield tax levied on timber cut under this Agreement as provided by the Z'Berg-Warren-Keene-Collier Forest Taxation Reform Act, Statutes of 1976, Chapter 176. The PURCHASER'S yield tax payments shall not be credited in any way for timber cut or other obligations of this Agreement.

27. By signing this contract, the PURCHASER swears under penalty of perjury that no more than one final unappealable finding of contempt of court by a federal court has been issued against the PURCHASER within the immediately preceding two-year period because of the PURCHASER'S failure to comply with an order of a federal court which orders compliance with an order of the National Labor Relations Board.

28. Upon mutual consent, either party may amend this contract in writing.

29. The PURCHASER understands that his/her performance under this contract will be evaluated by the STATE.

30. If contract involves the expenditure of public funds in excess of $10,000, contracting parties shall, in accordance with Government Code section 8546.7, be subject to examination and audit of the Bureau of State Audits for a period of three years after final payment under the contract. Examination and audit shall be confined to those matters connected with performance of the contract including, but not limited to, cost of administering contract.

NON-DISCRIMINATION/ FAIR EMPLOYMENT

31. During the performance of this Agreement, PURCHASER and its subcontractors shall not unlawfully discriminate, harass, or allow harassment against any employee or applicant for employment because of sex, race, color, ancestry, religious creed, national origin, physical disability (including HIV and AIDS), mental disability, medical condition (cancer), age (over 40), marital status, and denial of family care leave. PURCHASER and subcontractors shall insure that the evaluation and treatment of their employees and applicants for employment are free from such discrimination and harassment. PURCHASER and subcontractors shall comply with the provisions of the Fair Employment and Housing Act (Gov. Code §12990 (a-f) et seq.) and the applicable regulations promulgated thereunder (California Code of Regulations, Title 2, Section 7285 et seq.). The applicable regulations of the Fair Employment and Housing Commission implementing Government Code Section 12990 (a-f), set forth in Chapter 5 of Division 4 of Title 2 of the California Code of Regulations, are incorporated into this Agreement by reference and made a part hereof as if set forth in full. PURCHASER and its subcontractors shall give written notice of their

obligations under this clause to labor organizations with which they have a collective bargaining or other Agreement. PURCHASER shall include the nondiscrimination and compliance provisions of this clause in all subcontracts to perform work under the Agreement.

32. The PURCHASER certifies under the penalty of perjury under the laws of the State of California to have, unless exempted, complied with the nondiscrimination program requirements of Government Code Section 12990, California Code of Regulations, Title 2, Section 8103, and the general terms and conditions contained in the document CCC-307 are hereby incorporated by reference and made a part of this Agreement by this reference as if attached hereto.

33. This contract is complete and in force only after all STATE approvals are obtained.

IN WITNESS WHEREOF this Agreement has been executed by and on behalf of the parties hereto, the day and year first above written.

STATE OF CALIFORNIA
DEPARTMENT OF FORESTRY
AND FIRE PROTECTION

By _____

_____
(Name of PURCHASER)

By _____

_____
(Printed name)

_____
(Title)

EXHIBIT A

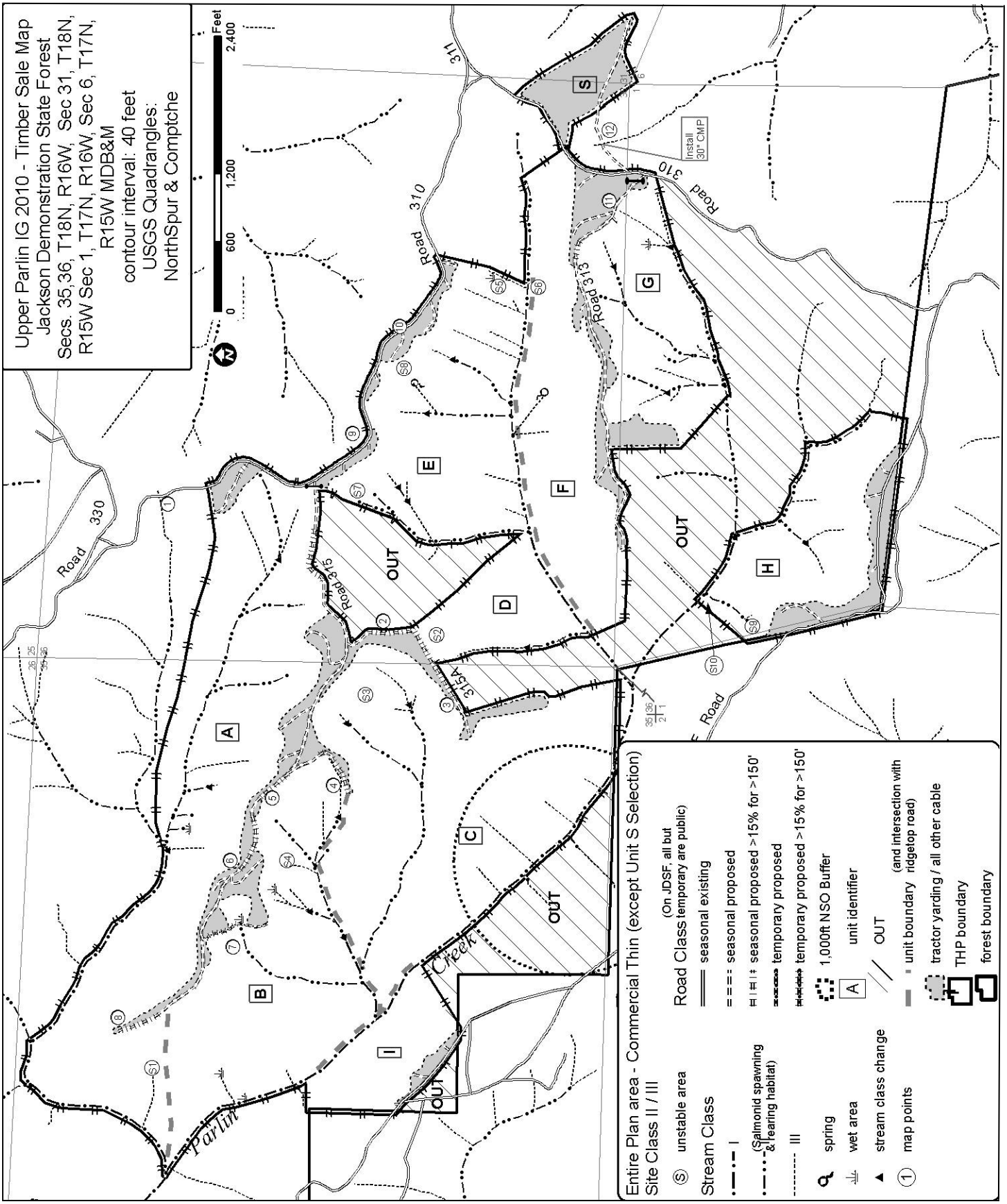
Upper Parlin IG 2010 - Timber Sale Map
Jackson Demonstration State Forest
Secs. 35,36, T18N, R16W, Sec 31, T18N, R15W Sec 1, T17N, R16W, Sec 6, T17N, R15W MDB&M
contour interval: 40 feet
USGS Quadrangles: NorthSpur & Comptche
0 600 1,200 2,400 Feet
Road 330
Road 310
Road 313
Road 315
Road 315A
Road 311
Road 310
Install 30" CMP
Parlin Creek
A
B
C
D
E
F
G
H
I
S
OUT
Entire Plan area - Commercial Thin (except Unit S Selection)
Site Class II / III
unstable area
Stream Class
I
(Salmonid spawning & rearing habitat)
III
spring
wet area
stream class change
map points
Road Class (On JDSF, all but temporary are public)
seasonal existing
seasonal proposed
seasonal proposed >15% for >150'
temporary proposed
temporary proposed >15% for >150'
1,000ft NSO Buffer
unit identifier
OUT
unit boundary (and intersection with ridgetop road)
tractor yarding / all other cable
THP boundary
forest boundary

EXHIBIT B

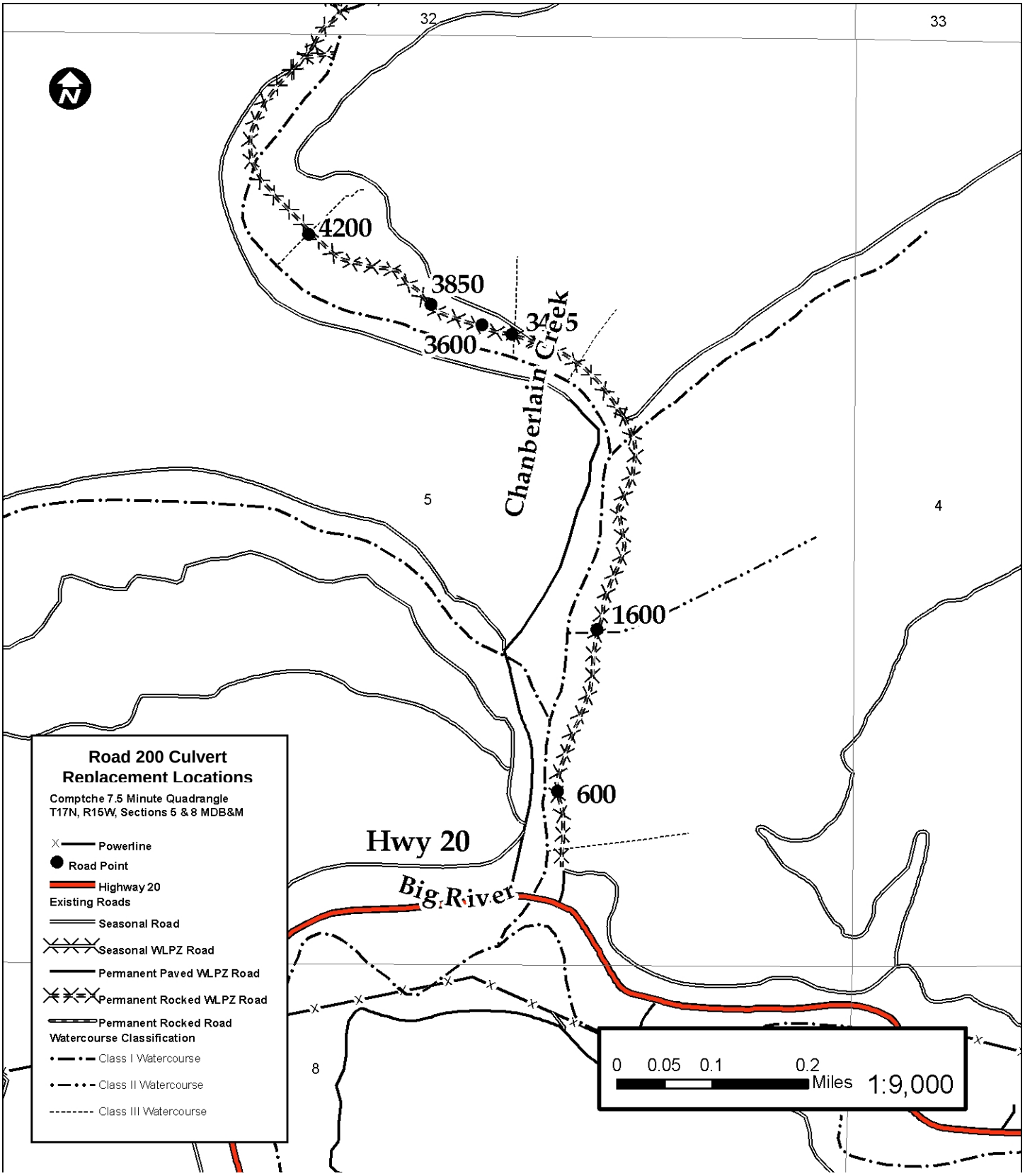
32
33
4200
3850
3600
34
5
Chanberlain Creek
5
4
1600
600
Hwy 20
Big River
8
Road 200 Culvert Replacement Locations
Comptche 7.5 Minute Quadrangle
T17N, R15W, Sections 5 & 8 MDB&M
Powerline
Road Point
Highway 20
Existing Roads
Seasonal Road
Seasonal WLPZ Road
Permanent Paved WLPZ Road
Permanent Rocked WLPZ Road
Permanent Rocked Road
Watercourse Classification
Class I Watercourse
Class II Watercourse
Class III Watercourse
0 0.05 0.1 0.2
Miles
1:9,000

EXHIBIT C

CULVERT AND MISCELLANEOUS ROAD WORK MATERIALS LIST

1. CULVERT:

ITEM	MATERIAL	DIAM.	PIECE LENGTH	PIECES	TOTAL LENGTH
Culvert	poly*	18″	20′	6	120′
Culvert	poly*	30″	20′	6	120′
Culvert	metal	54″	20′	3	60′
Coupler✢	-	18″	-	3	-
Coupler✢	-	30″	-	3	-
Coupler✢	-	54″	-	2	-

* Polyethylene culvert material shall be high density polyethylene plastic. Pipe shall have annular corrugations and an interior liner. The PURCHASER must submit product description and specifications to the Timber Sale Officer for approval before delivery or installation.

✢ Culverts constructed with Bell and Spigot Joints may be utilized where coupler bands are not necessary for successful linkage of culvert lengths.

2. OTHER MATERIALS TO COMPLETE THE WORK LISTED IN EXHIBIT C:

ITEM	QUANTITY
1-3″ Crushed Rock	345 cubic yards
Rip Rap	36 cubic yards
Fence posts, steel, six-foot	4 ea.
Straw	135 bales*
Lignin or equivalent	per Item 14.p

A sufficient quantity of bolts, nuts, washers, and 12 gauge wire to install coupling bands and attach downspout stakes to the satisfaction of the Timber Sale Officer.

*****Required quantity may be less if slash is utilized successfully to meet erosion control requirements stated in this Agreement.

EXHIBIT D

CULVERT AND MISCELLANEOUS ROAD WORK LIST

The PURCHASER shall perform work for each Map Point consistent with Section II of the THP.

All culverts removed from watercourse crossings and ditch relief culverts shall be disposed of at an off-forest public disposal site.

Map Point	Work to be Done
2 to 3	Using an excavator and tractor, perform full bench road construction between Map Points 2 and 3. Rock running surface of the road with 116 cu.yds. of 1-3″ crushed rock for a 350 foot section of road, above Map Point S2.
5 to 6	Using an excavator and tractor, perform full bench road construction between Map Points 5 and 6.
7	Using an excavator or backhoe and tractor, install a temporary crossing with 40 linear feet of new 18 inch diameter plastic culvert and 1 coupling. Upon completion of operations, remove culvert and mulch or tractor pack with slash bare mineral soil on both sides of crossing and areas exposed from operations.
8	Using an excavator and/or backhoe and/or tractor, rock running surface of the road with 110 cu.yds. of 1-3″ crushed road rock for a 330 foot section of road.
9	Use excavator to build spur road beginning at the intersection of Road 310.
10	Use excavator to build spur road beginning at the intersection of Road 310.
11	Rock running surface of road with 34 cu.yds. of 1-3″ crushed road rock for a 100 foot section of road at flagged location.
12	Using an excavator and/or backhoe and tractor, install 40 linear feet of new 18 inch diameter plastic culvert, 1 coupling and 1 metal stake for the inlet. Using an excavator, place large wood or rock at the culvert outlet to act as an energy dissipater. Mulch or tractor pack with slash bare mineral soil exposed by operations.
600	Using a backhoe or excavator, and tractor remove existing ditch relief culvert and replace with 40 linear feet of new 18 inch plastic culvert, 1 coupling and 1 metal stake for the inlet. Rock disturbed running surface of the road with 5 cu. yd. of 1-3″ crushed rock. Seed and mulch bare mineral soil exposed by operations.

1600 Using an excavator and tractor, remove existing culvert and install 60 linear feet of 54 inch culvert with critical dip centered above the culvert, 2 couplings and 1 metal stake for the inlet. Armor the inlet, outlet and lower half of fill with 30 cu. yd. of 6-18″ rock. Armor the remainder of fill with rock or woody debris. Turf reinforcement mat may be used on outboard edge of fill if approved by the Timber Sale Officer. Rock the disturbed running surface of the road with 15 cu. yd. of 1-3″ crushed rock. Seed and mulch bare mineral soil exposed by operations.

3475 Using a backhoe or excavator and tractor, re-align/re-construct channel through road and back into natural channel. Excavate from top to bottom flags and install 40 feet of 30″ culvert with critical dip, 1 coupling and 1 metal stake for the inlet. Taper top excavation and armor inlet with 3 cu. yd. of 6-10″ rock. Lay side-slopes back to 50% or natural slopes where feasible. Place woody debris in channel upslope and downslope of culvert. Rock disturbed running surface of the road with 5 cu. yd. of 1-3″ crushed rock. Seed and mulch bare mineral soil exposed by operations.

3600 Repair crushed inlet of ditch relief culvert. If inlet cannot be repaired, pull back fill material at inlet to expose 1-2 feet of culvert length and cut culvert to create a new inlet. Seed and mulch bare mineral soil exposed by operations.

3850 Remove existing culvert and replace with 40 feet of new 18″ plastic culvert, 1 coupling and 1 metal stake for the inlet. Rock disturbed running surface of the road with 5 cu. yd. of 1-3″ crushed rock. Seed and mulch bare mineral soil exposed by operations.

4200 Remove existing culvert and replace with 40 feet of 30″ mitered culvert, 1 coupling, 1 metal stake for the inlet and a critical dip and pull perched fill material. Armor the outlet of the culvert with 3 cu. yd. of 6-18″ crushed rock. Rock disturbed running surface of the road with 5 cu. yd. of 1-3″ crushed rock. Seed and mulch bare mineral soil exposed by operations.

EXHIBIT E

CULVERTS AND DOWNSPOUTS

LENGTH: 40' minimum in curves (inturns) where yarder will have to pass. Use drop inlets near steep, unstable banks.

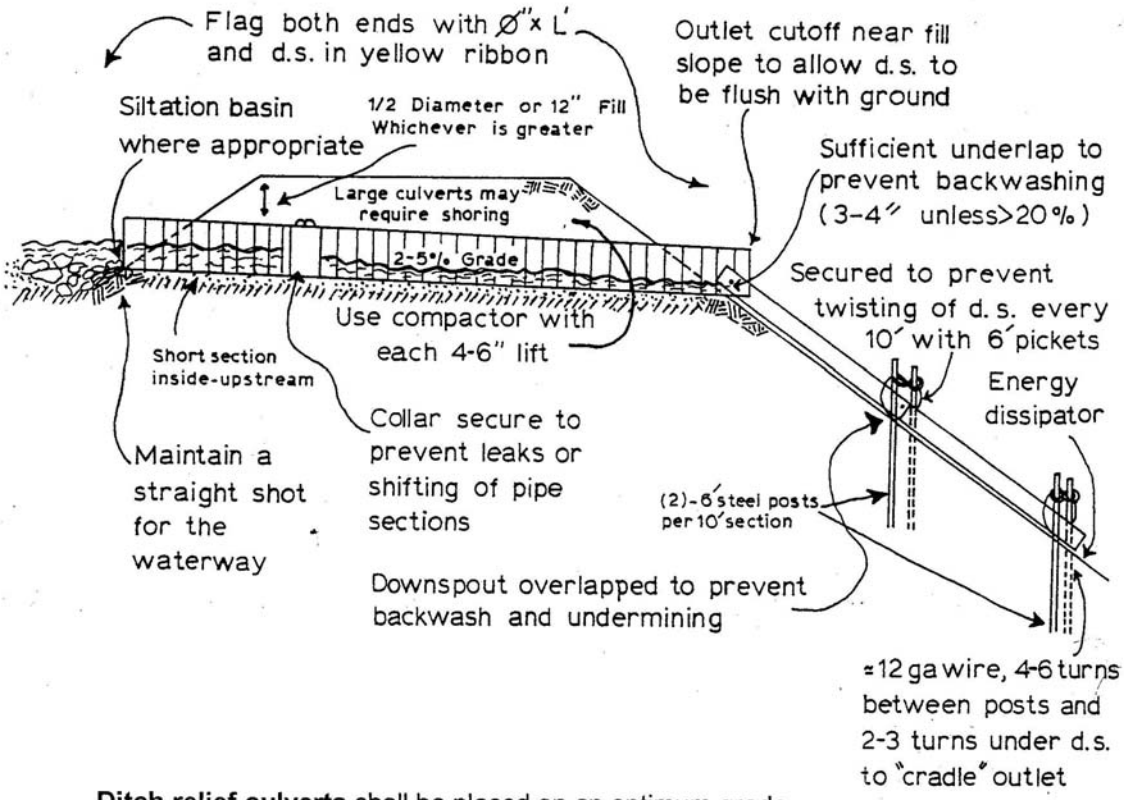

Ditch relief culverts shall be placed on an optimum grade of 3% (2% minimum - 5% maximum)

All **stream crossing culverts** shall be placed at grade of original streambed.

Use adequate length of downspout to get the water off of the fill.

Bolt ALL connections: downspout to pipe, downspout to downspout, pipe collar.

EXHIBIT F

ROLLING DIP INSTALLATION GUIDELINES

A rolling dip is a smooth shallow ditch or depression that is at least 6" in depth and should be constructed at an angle of 45 to 60 degrees from the centerline of the road (can be nearly perpendicular). The cross grade should be at least 1 percent greater than the grade of the road. Rock riprap or down-drain flumes may be needed to prevent erosion on outsloped roads (see diagrams below).

Dips should be constructed deep enough into the road subgrade so that traffic and subsequent road grading will not obliterate them. Their length and depth should provide the needed drainage, but not be a driving hazard.

ROLLING DIP DIMENSIONS

Road Grade (%)	**Upslope approach** (distance from up-road start of rolling dip to trough in feet) A	**Reverse Grade** (distance from trough to crest in feet) B	**Depth below average road grade at discharge end of trough** (ft) C	**Depth below average road grade at upslope end of trough** (ft) D
<6	55	15-20	0.9	0.3
8	65	15-20	1.0	0.2
10	75	15-20	1.1	0.1
12	85	20-25	1.2	0.1
>12	100	20-25	1.3	0.1

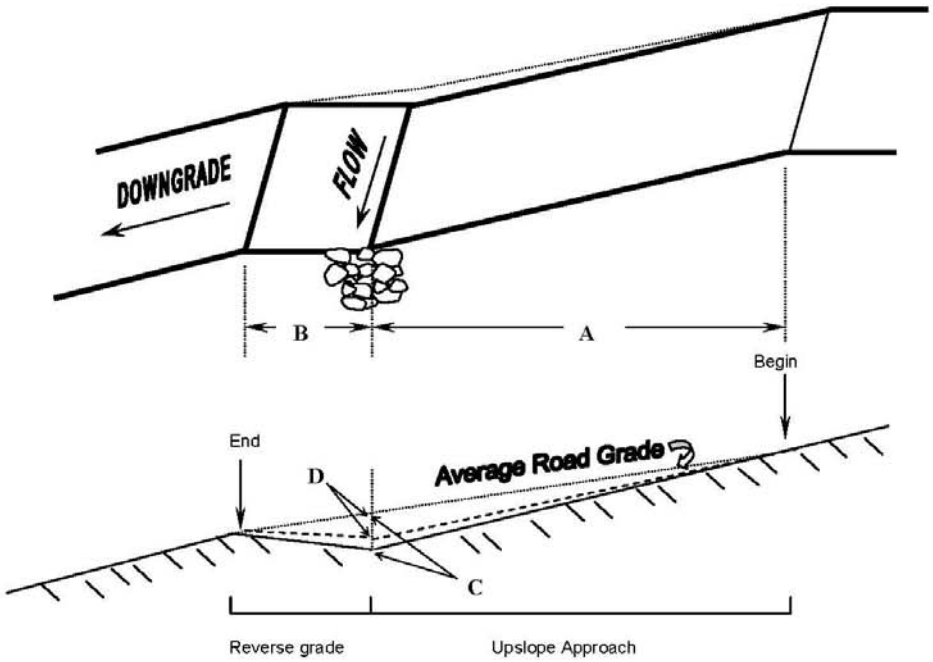

Text and diagrams from W. Weaver and D. Hagans, *Forest and Ranch Roads*, MCRCD, June 1994, pp. 48, 58.

EXHIBIT G

GATE PLAN

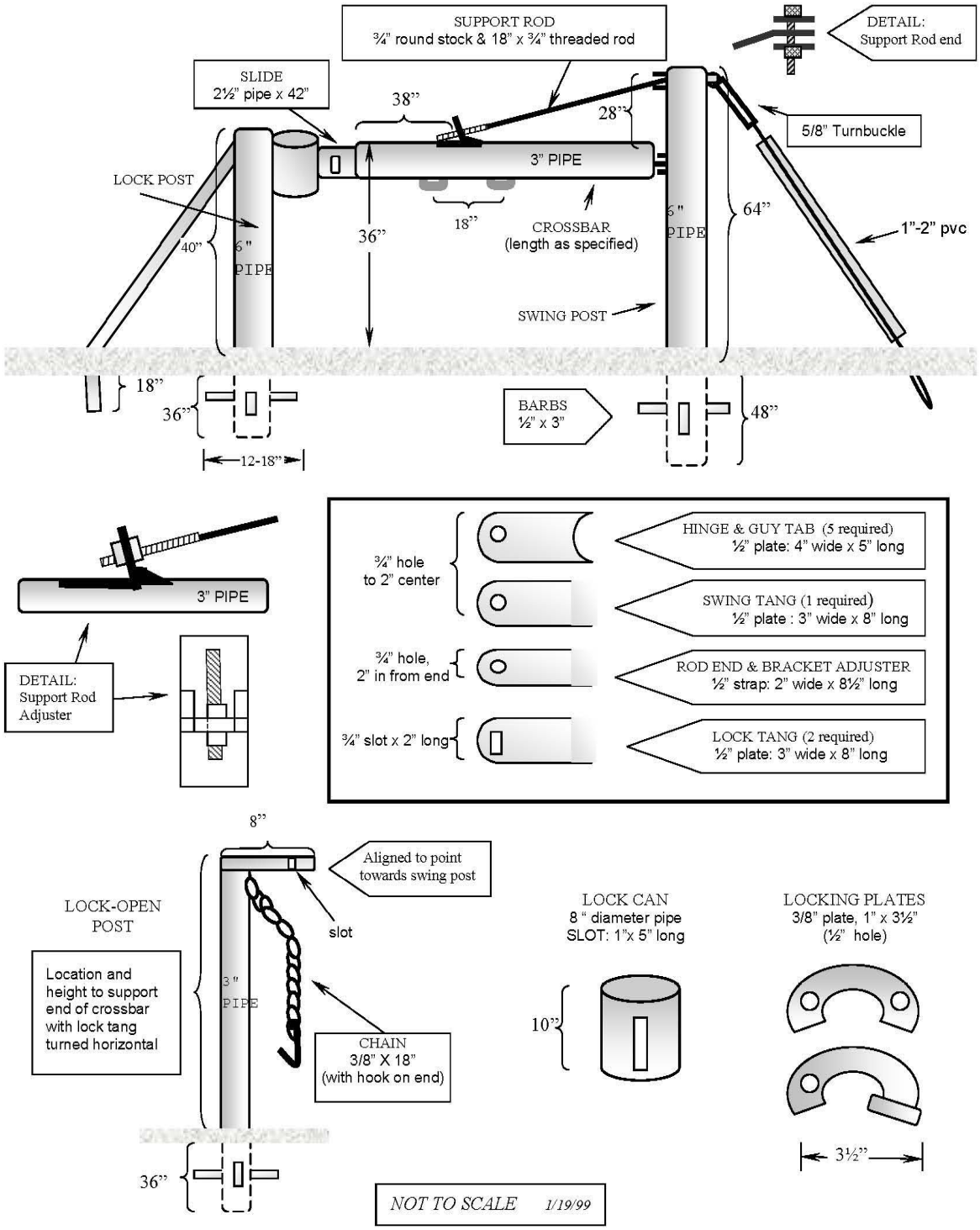

GATE SPECIFICATIONS

MATERIALS	DESCRIPTION
6" heavy wall pipe	swing and lock posts
3" black pipe	Crossbar, lock-open post; barrier posts as needed
42″ of 2½" pipe	slide
10″ of ¼″ x 8" black pipe	lock can
33″ of ½" x 4″	Hinges, guy tab, and swing tang
17″ of ½″ x 2″	Support rod end and adjuster bracket
16″ of ½" x 3″	Lock tang & top piece for lock-open post
3" x ½" bar stock	sign board ears
¾″ round stock	Support rod
18″ of ¾″ threaded rod	Support rod- adjustable section
½"-¾″ rebar or round stock	Barbs for swing/lock post
¾″ x 2½" bolts, nuts, flat washers	Hinges and support rod
1″ x 3/8″ plate	Locking plates
3" black pipe, rail, or structural steel	lock post braces
18″ of minimum 3/8″ chain	Chain for lock-open post
hook	Hook for end of chain on lock-open post
½" minimum diameter cable	swing post guy cable
5/8" minimum diameter thread, 10" minimum take-up, galvanized, clevis or eye at both ends	Turnbuckle
5/8" minimum shackle	To attach turnbuckle to guy tab
1″-2″ diameter pvc pipe	Cover for guy cable (ground to turnbuckle)
Rust-inhibiting undercoat, tractor yellow enamel topcoat	Coatings
approximately 3-4 cubic yards	concrete

CONSTRUCTION

Fabrication shall be neat and professional. Welds shall be complete, with burrs and sharp edges smoothed. Gate length shall be as specified in the text of the Timber Sale Agreement, or sized to fit the site. The ears shown on the underside of the cross bar are for the purpose of attaching a plywood sign board; they shall each have a ½" x 1½" horizontal slot for bolting the board, and shall be positioned to space the centers of the slots 18" apart.

A ¼″ bead shall be welded on the outside of the end of the slide opposite the lock tang, and on the inside of the crossbar at the end opposite the hinge. This will be done to prevent the slide from being pulled all the way out of the crossbar while not inhibiting the slide from moving freely.

INSTALLATION

Holes for hinge and lock posts shall be augered to 12-18" in diameter and 36-48" deep (as specified in the diagram). Concrete shall fill the holes with a mound slightly above the ground. Concrete shall be used to fill the posts to the top. The swing post shall be guyed at an angle no steeper than 45° from horizontal. If no natural anchor is available, a suitable artificial anchor shall be provided. Two rigid diagonal braces shall be attached to the lock post. They shall be of lengths and at angles to best fit the site, and shall have vertical legs set in a minimum of 18" of concrete. Barrier posts set in concrete, or other obstructions such as stumps, logs or boulders, shall be placed as necessary to block any gaps greater than 30" across which motor vehicles, including ATVs, might use to drive around the gate. Installation shall align the lock tang through the center of the slot on the lock can. Between 30 and 90 days after installation, the gate shall be inspected and adjusted or modified as necessary to produce smooth, free-swinging operation that does not require lifting and that allows easy insertion and removal of the locking plate.

EXHIBIT H

SAMPLE FORM FOR REPORTING OPERATING COSTS

Page ___ of ___ for ACTIVITY: _____ AREA or UNIT: _____

PART 1. EQUIPMENT

Equipment Type	No. of Hours Worked	Rate per Hour	Check if With Oper. *	Total Cost

PART 2. LABOR

Labor Type	No. of Hours Worked Straight	No. of Hours Worked OT	Rate per Hour * Straight	Rate per Hour * OT	Total Cost

* Labor rates, whether with equipment rates or listed separately, must include state comp insurance, benefits, and other employer costs.

PART 3. MATERIALS, SERVICES, OVERHEAD, ETC.

Item	Quantity	Unit	Cost/Unit	Total Cost

Attach additional information as appropriate.

EXHIBIT I

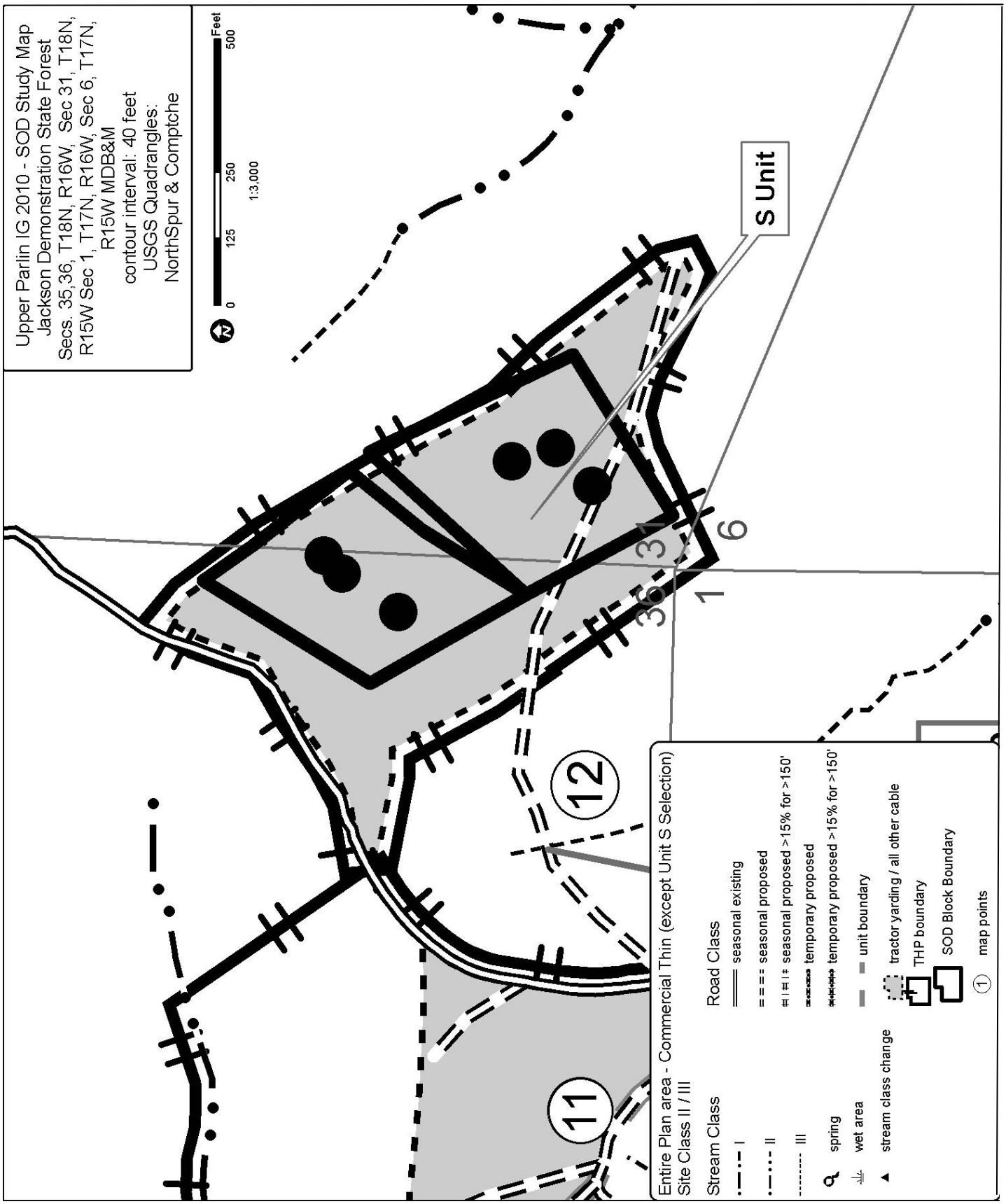
Upper Parlin IG 2010 - SOD Study Map
Jackson Demonstration State Forest
Secs. 35,36, T18N, R16W, Sec 31, T18N, R15W Sec 1, T17N, R16W, Sec 6, T17N, R15W MDB&M
contour interval: 40 feet
USGS Quadrangles:
NorthSpur & Comptche
N
0
125
250
500
Feet
1:3,000
S Unit
11
12
36
31
1
6
Entire Plan area - Commercial Thin (except Unit S Selection)
Site Class II / III
Stream Class
I
II
III
spring
wet area
stream class change
Road Class
seasonal existing
seasonal proposed
seasonal proposed >15% for >150'
temporary proposed
temporary proposed >15% for >150'
unit boundary
tractor yarding / all other cable
THP boundary
SOD Block Boundary
map points